WKW

TROLLEYS

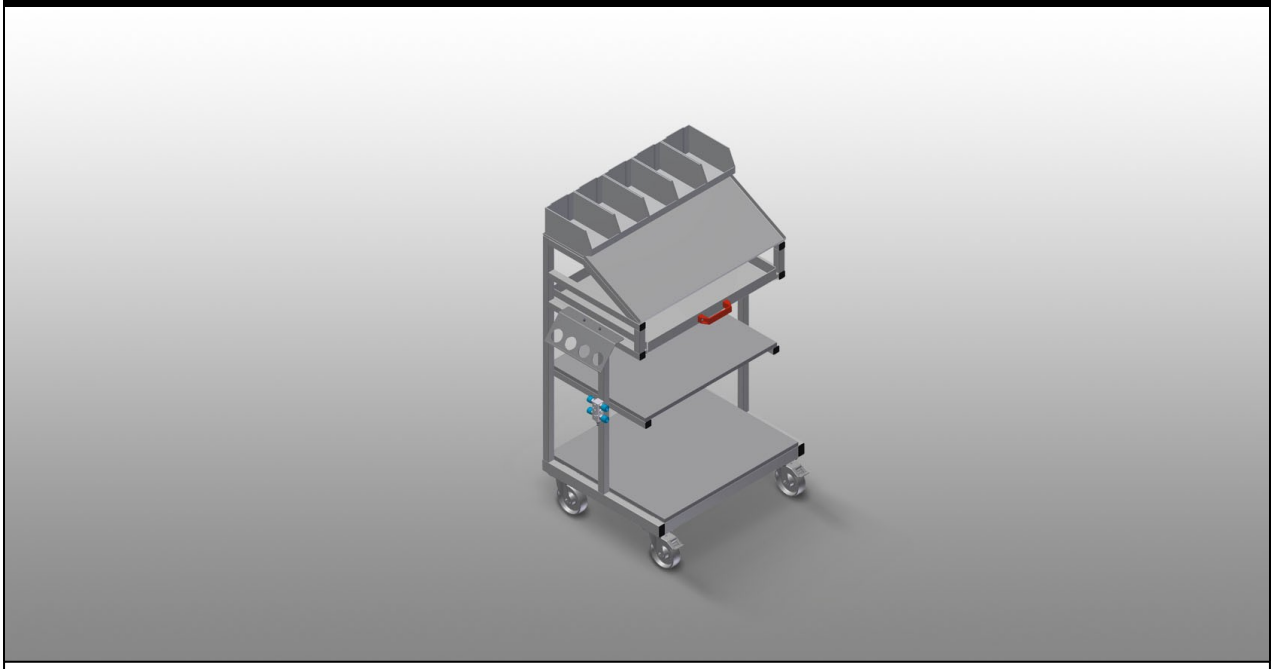

Accessories trolley for tools and small parts for the assembly station. Stable steel construction. The trolley is suitable for depositing tools and material. Makes organising the workplace easy. Makes transportation to the assembly station easy. Two storage trays for setting down accessories and tools. Five PVC containers for small accessories, hardware and screws. Storage area with reading desk for drawings. Tool rack for pneumatic or electric tools. Four swivel castors, two of which with locking stop.

elumatec AG
Pinacher Straße, 61
75417 Mühlacker
Germany

Tel +49 7041-14-184
sales@elumatec.com
www.elumatec.com

The right to make technical alterations is reserved.

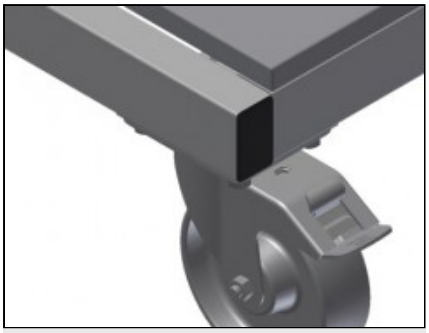

Casters

Four casters, two of which have a fixing brake, provide a high degree of mobility and easy, safe handling

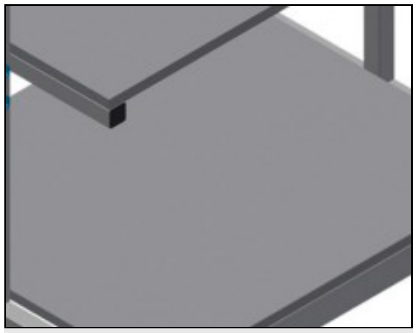

Storage surfaces for accessories

Storage tray for setting down accessories and tools

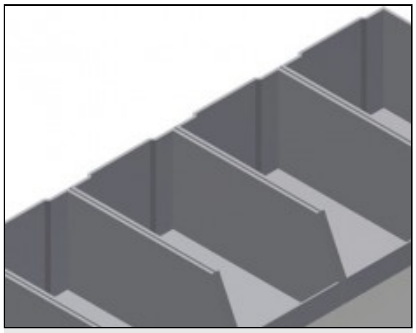

Containers

PVC containers for small accessories, hardware and screws

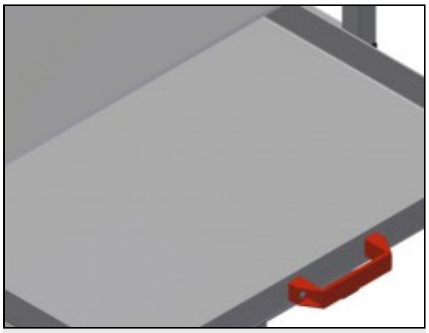

Drawer

Drawer for tools

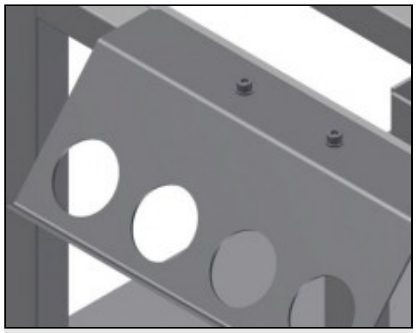

Tool rack

Tool rack for pneumatic and electrical tools

elumatec AG
Pinacher Straße, 61
75417 Mühlacker
Germany

Tel +49 7041-14-184
sales@elumatec.com
www.elumatec.com

The right to make technical alterations is reserved.

WKW / TROLLEYS

MODELS

WKW 800



DIMENSION AND WEIGHT

Length (mm)	750
Width (mm)	600
Height (mm)	1.300
Weight (kg)	60

STORAGE CAPACITY

Load capacity (kg)	300
Drawer for tools	1
Storage trays	2
PVC containers	5

CHARACTERISTICS

4-fold compressed air supply	●
Swivel castors	4
Swivel castors with locking stop	2
Swivel castors diameter (mm)	125

Included ● Available ○

elumatec AG
Pinacher Straße, 61
75417 Mühlacker
Germany

Tel +49 7041-14-184
sales@elumatec.com
www.elumatec.com

The right to make technical alterations is reserved.