elumatec

a voilàp company

VE

ASSEMBLY TABLES

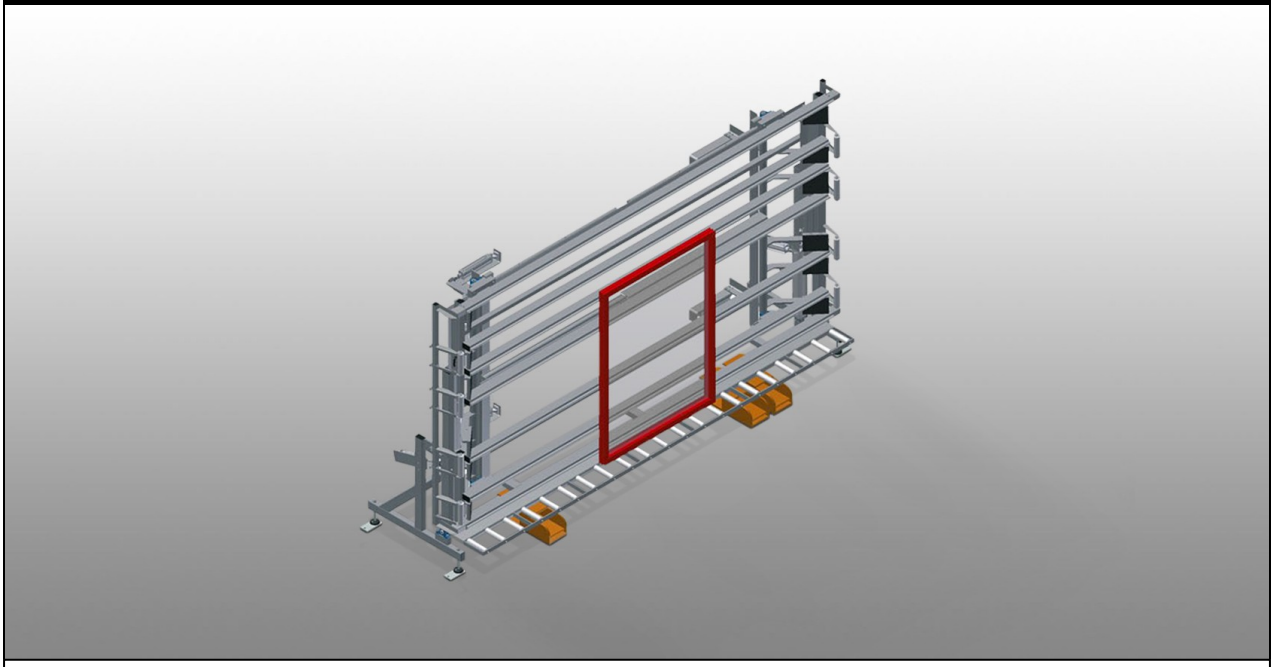

Inspection and glazing unit for glazing and final inspection in individual and serial assembly line production. Quick and precise assembly of windows, doors and elements. Stable steel construction. Easy operation by means of foot switch.

VE 3000 / VE 4000: Precision ensured through parallel clamping bar pressing technique. Height continuously adjustable. Two pressing bars which fold down and can be moved pneumatically and 4-fold compressed air supply.

VE 3000/60: Precision ensured through parallel clamping bar pressing technique with manually operated pressing bars. Pneumatic centring, storage area for tools and 4-fold compressed air supply.

elumatec AG
Pinacher Straße, 61
75417 Mühlacker
Germany

Tel +49 7041-14-184
sales@elumatec.com
www.elumatec.com

The right to make technical alterations is reserved.

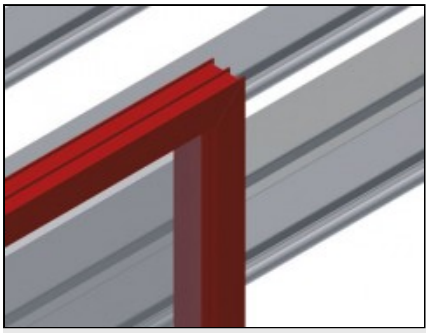

Back support VE 3000 / VE 4000

Rear back support with plastic slide bars

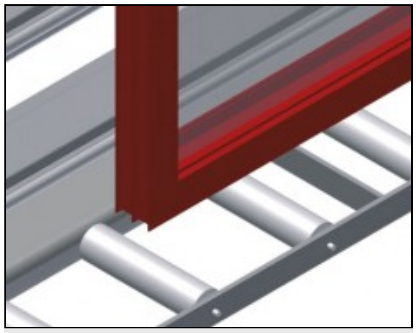

Supports VE 3000

Lower roller conveyor with support rollers, L = 200 mm

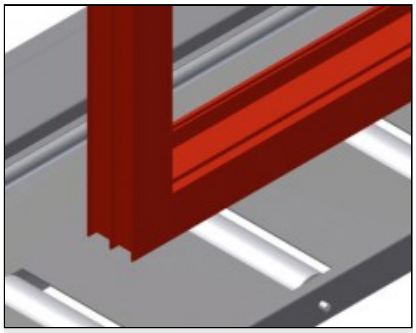

Supports VE 4000

Lower roller conveyor with support rollers, L = 200 mm

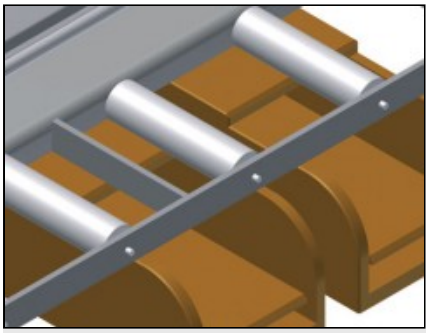

Foot switch VE 3000

All functions are controlled via foot valves

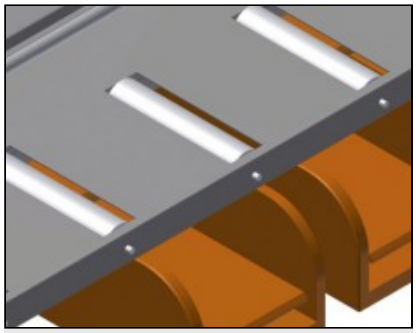

Foot switch VE 4000

All functions are controlled via foot valves

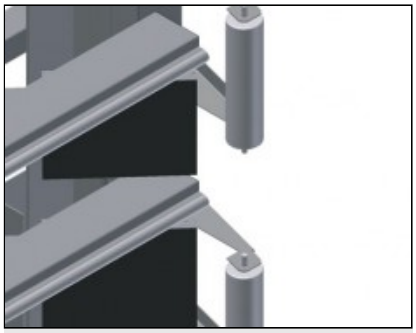

Pressing bar VE 3000 / VE 4000

Simultaneous, synchronous folding down and moving of the pressing bars ensure a minimum of time is required for opening and closing the press. Allows free pass-through of the window.

elumatec AG
Pinacher Straße, 61
75417 Mühlacker
Germany

Tel +49 7041-14-184
sales@elumatec.com
www.elumatec.com

The right to make technical alterations is reserved.

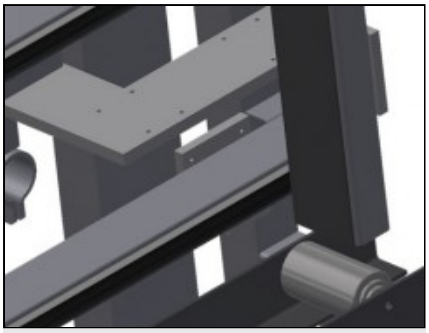

Pressing bar VE 3000/60

Pneumatic centring. Precision ensured through parallel clamping bar pressing technique



Back support VE 3000/60

Rear back support with plastic slide bars

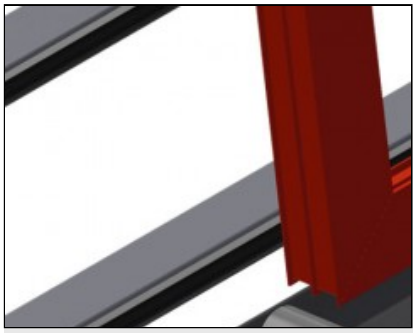

Supports VE 3000/60

Lower roller conveyor with support rollers, L = 120 mm

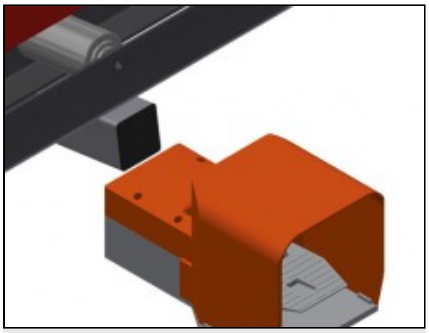

Foot switch VE 3000/60

All functions are controlled via foot valves

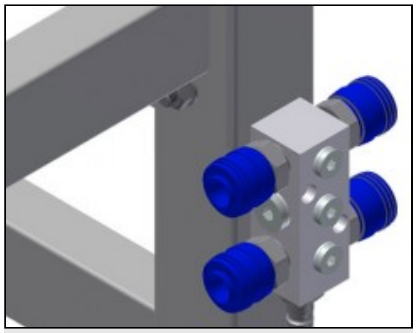

4-fold compressed air connection

4-fold compressed air connection for connecting compressed-air tools

elumatec AG
Pinacher Straße, 61
75417 Mühlacker
Germany

Tel +49 7041-14-184
sales@elumatec.com
www.elumatec.com

The right to make technical alterations is reserved.

VE / ASSEMBLY TABLES

MODELS

VE 3000



VE 4000



VE 3000/60



DIMENSION AND WEIGHT

VE 3000 / VE 4000 / VE 3000/60

Length (mm)	4.410 / 5.440 / 3.050
Width (mm)	1.180 / 1.180 / 900
Height (mm)	2.600
Lower roller conveyor width (mm)	200 / 200 / 120
Weight (kg)	470 / 580 / 370

WORKPIECE LOCKING

VE 3000 / VE 4000 / VE 3000/60

Maximum clamping width (mm)	3.000 / 4.000 / 2.800
Minimum clamping width (mm)	400 / 390 / 390
Clamping bar height (mm)	2.300
Clamping bar width (mm)	120 / 200 / 100

VE 3000/60

Pneumatic centring	●

elumatec AG
Pinacher Straße, 61
75417 Mühlacker
Germany

Tel +49 7041-14-184
sales@elumatec.com
www.elumatec.com

The right to make technical alterations is reserved.

CHARACTERISTICS

VE 3000 / VE 4000 / VE 3000/60

Load capacity (kg)	200
4-fold compressed air supply	●
Operating air pressure (bar)	7
Air consumption approx. (l/min)	35

VE 3000 / VE 4000

Adjustable height (mm)	500
Height continuously adjustable	●
Pneumatic tilt adjustment of 0° – 8°	○
Lead-in rollers right, complete L= 2052 mm	○
Lead-in rollers left, complete L= 2052 mm	○
Profile protectors for L= 200 mm	○
Mobility unit	○
Rail 2,0 m left and right	○

VE 3000/60

Storage area for tools	●
Adjustable height	○

Included ● Available ○

elumatec AG
Pinacher Straße, 61
75417 Mühlacker
Germany

Tel +49 7041-14-184
sales@elumatec.com
www.elumatec.com

The right to make technical alterations is reserved.