TPK

TROLLEYS

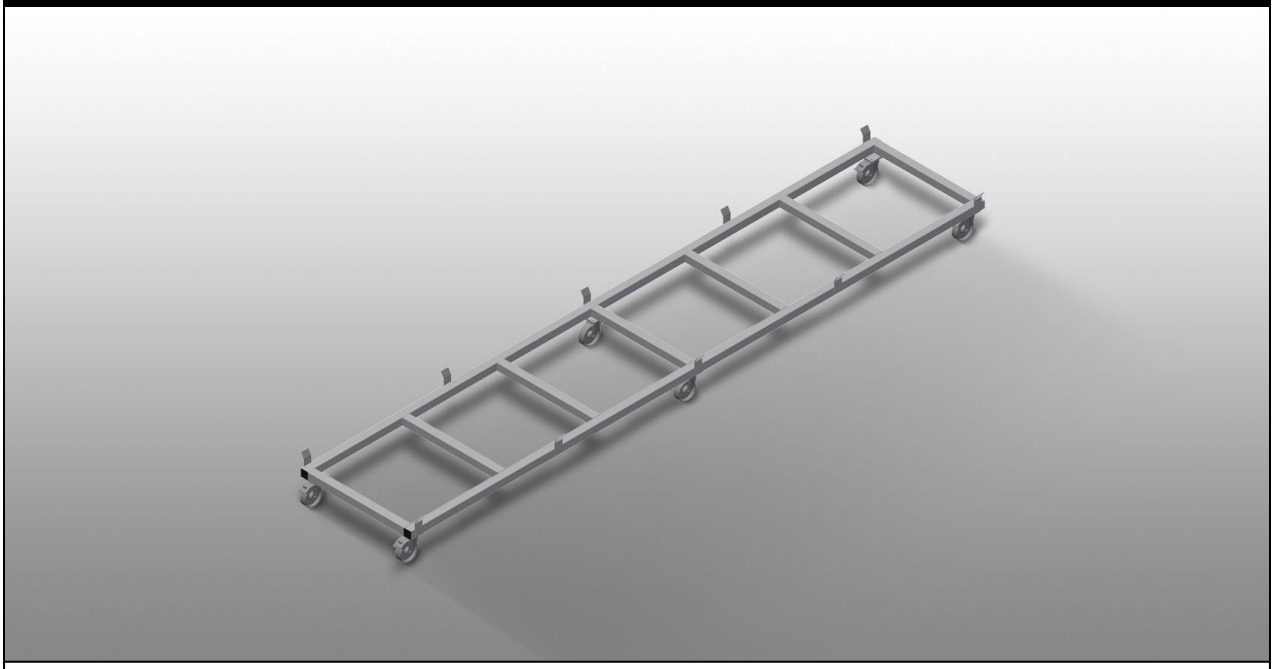

Stable steel construction. Transport trolley for carrying profile cassettes. Ideal for transporting profile cassettes from storage to the saw or to the machining centre. For profile pallets of up to 760 mm width. Safety tabs to secure the pallets. Six rollers, four swivel castors with locking stop and two fixed rollers.

elumatec AG
Pinacher Straße, 61
75417 Mühlacker
Germany

Tel +49 7041-14-184
sales@elumatec.com
www.elumatec.com

The right to make technical alterations is reserved.

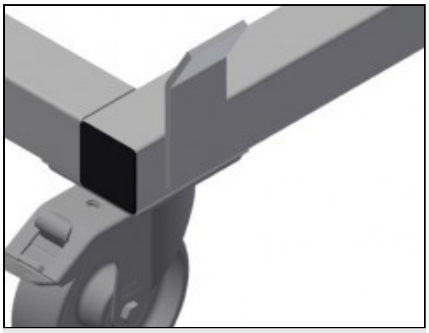

Casters

Six rollers, four with a fixing brake and two fixed rollers, provide a high degree of mobility and easy, safe handling

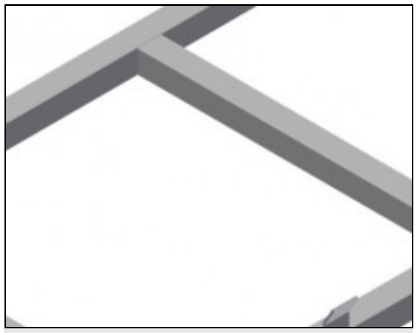

Safety tabs

Safety tabs to secure the pallets

elumatec AG
Pinacher Straße, 61
75417 Mühlacker
Germany

Tel +49 7041-14-184
sales@elumatec.com
www.elumatec.com

The right to make technical alterations is reserved.

TPK / TROLLEYS

MODELS

TPK 4000

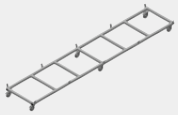

DIMENSION AND WEIGHT

Length (mm)	4.000
Width (mm)	820
Height (mm)	285
Weight (kg)	65

STORAGE CAPACITY

Load width (mm)	770
Load capacity (kg)	1.200

CHARACTERISTICS

Swivel castors	6
Swivel castors with locking stop	4
Swivel castors diameter (mm)	125

Included ● Available ○

elumatec AG
Pinacher Straße, 61
75417 Mühlacker
Germany

Tel +49 7041-14-184
sales@elumatec.com
www.elumatec.com

The right to make technical alterations is reserved.