TMT

ASSEMBLY TABLES

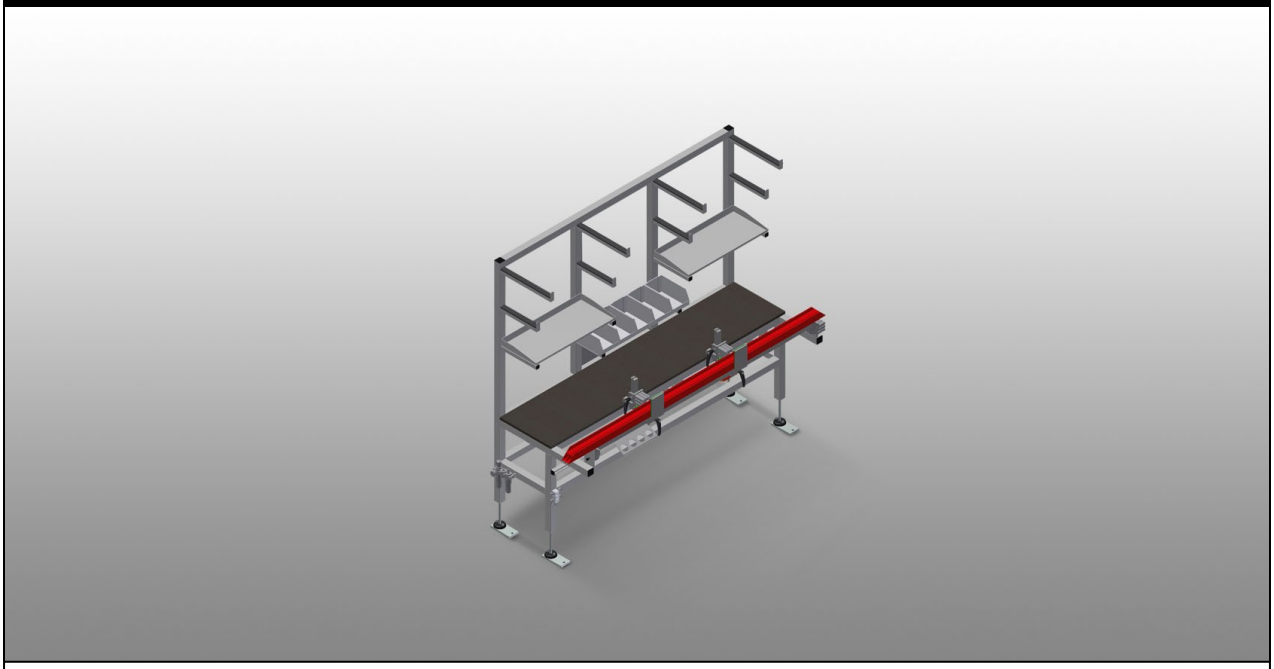

Assembly table for pre-assembly of hardware and gaskets. Stable steel construction. Work table for all pre-assembly tasks for hardware and gaskets on windows and doors. Equipped with two clamps. Clamping device for profiles with a depth of 45 - 120 mm and facing width of 50 - 150 mm. Clamping position can be adjusted. Clamping cylinder is activated by a foot switch. 180° pivoting feature for the clamped profiles in 30° steps via a foot switch, lockable. Support arms for long parts. Two storage areas for setting down tools and small parts. Drawers for tools. Rack for screw driving unit or drill. 4-fold compressed air supply. Double two-pin grounded socket.

elumatec AG
Pinacher Straße, 61
75417 Mühlacker
Germany

Tel +49 7041-14-184
sales@elumatec.com
www.elumatec.com

The right to make technical alterations is reserved.

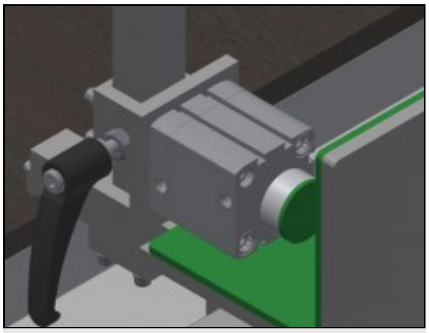

Clamping device

Clamping device for profiles with a depth of 45 – 120 mm and facing width of 50 – 150 mm. Clamping position adjustable in the longitudinal direction of the profile, clamping cylinder actuated via a foot switch

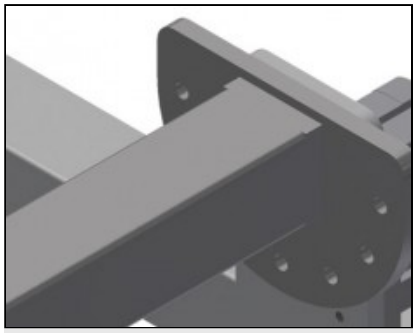

Pivoting mechanism

180° pivoting feature for the clamped profiles in 30° steps via a foot switch, lockable

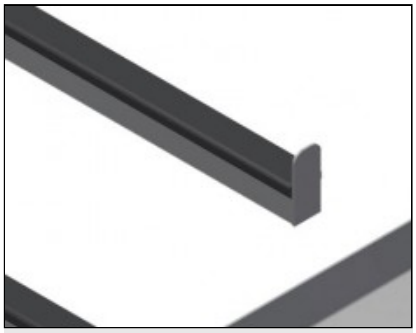

Support arms

Support arms for long parts such as multiple locking hardware. Storage areas for tools and small parts

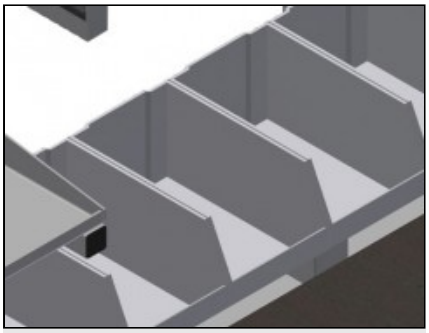

Storage area

Storage area with five trays. PVC containers for small accessories, hardware and screws

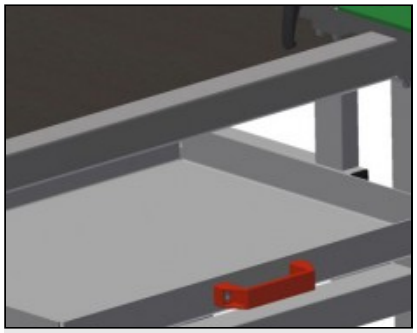

Drawer

Drawer for tools. Rubber coated tool trays

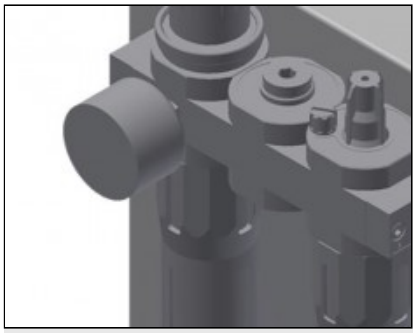

Maintenance unit

Maintenance unit for compressed-air tools

elumatec AG
Pinacher Straße, 61
75417 Mühlacker
Germany

Tel +49 7041-14-184
sales@elumatec.com
www.elumatec.com

The right to make technical alterations is reserved.

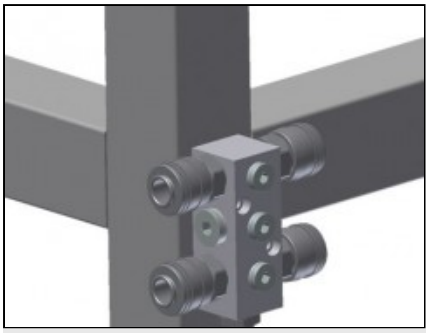

4-fold compressed air connection

4-fold compressed air connection for connecting compressed-air tools

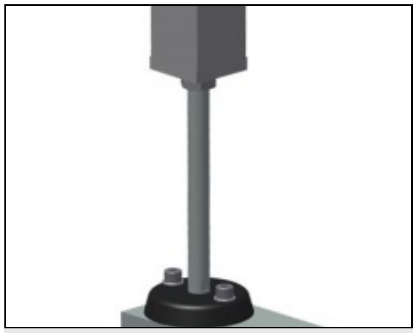

Articulated foot

Working height can be set to 850 – 1,000 mm by means of adjustable feet



Tool rack

Tool rack for pneumatic or electric tools

elumatec AG
Pinacher Straße, 61
75417 Mühlacker
Germany

Tel +49 7041-14-184
sales@elumatec.com
www.elumatec.com

The right to make technical alterations is reserved.

TMT / ASSEMBLY TABLES

MODELS

TMT 2000



DIMENSION AND WEIGHT

Length (mm)	2.000
Width (mm)	850
Height (mm)	1.970
Weight (kg)	145

CHARACTERISTICS

Clamps	2
Storage areas for setting down tools and small parts	2
Drawers for tools	●
Rack for screw driving unit or drill	●
4-fold compressed air supply	●
Operating air pressure (bar)	7
Air consumption approx. (l/min)	20
Double two-pin grounded socket	●

Included ● Available ○

elumatec AG
Pinacher Straße, 61
75417 Mühlacker
Germany

Tel +49 7041-14-184
sales@elumatec.com
www.elumatec.com

The right to make technical alterations is reserved.