SBZ 151

PORTAL MACHINING CENTERS



- 5-axis profile machining centre
- Designed for flexible and efficient machining of aluminium and thin-walled steel profiles
- All operations, such as routing, drilling, tapping, thread milling, notching and sawing, are performed while the profile bar is stationary to protect the profile surfaces
- Fast positioning of the machining unit with up to 66 m/min thanks to dynamic servo drives
- 6-sided machining. From below with an angle head (optional)
- The on-board tool magazines ensure that tool changing times are kept short, thereby optimizing machining cycles
- One magazine can be equipped with 13 standard tools and seven special tools (angle routing head and special cutters). An additional magazine for the saw blade,

diameter 400 mm or 500 mm

- Autonomous clamp positioning with absolute measurement system
- Two separate working zones enable machining in shuttle operation. Secure access with safety fences and light barriers
- 5-axis CNC control with independent CNC for 3D machining, notching and cutting
- The absolute rotary encoder system means no axis homing is required
- Network connection and USB port
- Operating terminal with Windows operating system and 15" flat screen
- Remote online maintenance
- eluCloud ready

Machining lengths

elumatec AG
Pinacher Straße, 61
75417 Mühlacker
Germany

Tel +49 7041-14-184
sales@elumatec.com
www.elumatec.com

The right to make technical alterations is reserved.

SBZ 151 Edition 90 - 6.0 m

- Max. machining length with profile end machining, 5,680 mm
- Max. machining length without profile end machining, 6,000 mm

SBZ 151 Edition 90 - 7.3 m

- Max. machining length with profile end machining, 6,980 mm
- Max. machining length without profile end machining, 7,300 mm

SBZ 151 Edition 90 - 9.0 m

- Max. machining length with profile end machining, 8,680 mm
- Max. machining length without profile end machining, 9,000 mm

SBZ 151 Edition 90 - 10.3 m

- Max. machining length with profile end machining, 9,980 mm
- Max. machining length without profile end machining, 10,300 mm

SBZ 151 Edition 90 - 12.0 m

- Max. machining length with profile end machining, 11,680 mm
- Max. machining length without profile end machining, 12,000 mm

SBZ 151 Edition 90 - 13.3 m

- Max. machining length with profile end machining, 12,980 mm
- Max. machining length without profile end machining, 13,300 mm

SBZ 151 Edition 90 - 15.0 m

- Max. machining length with profile end machining, 14,680 mm
- Max. machining length without profile end machining, 15,000 mm

SBZ 151 Edition 90 - 16.3 m

- Max. machining length with profile end machining, 15,980 mm
- Max. machining length without profile end machining, 16,300 mm

Longer versions available upon request

Options

- Automatic length measurement on both sides
- Automatic length measurement on both sides with Z travel
- Tool length measurement and fracture detection
- Tapping without compensation chuck
- Clock system
- 3D wireless measurement sensor
- Tools
- Tool holders
- Collet chucks
- Collets
- Angle routing heads for machining from below

elumatec AG
Pinacher Straße, 61
75417 Mühlacker
Germany

Tel +49 7041-14-184
sales@elumatec.com
www.elumatec.com

The right to make technical alterations is reserved.

- Saw blades
- Chips conveyor belt
- Vapour extractor
- Label printer
- Barcode scanner

elumatec AG
Pinacher Straße, 61
75417 Mühlacker
Germany

Tel +49 7041-14-184
sales@elumatec.com
www.elumatec.com

The right to make technical alterations is reserved.



Profile machining centre SBZ 151 Edition 90

5-axis machining with enlarged pivoting range from -110° to +110°

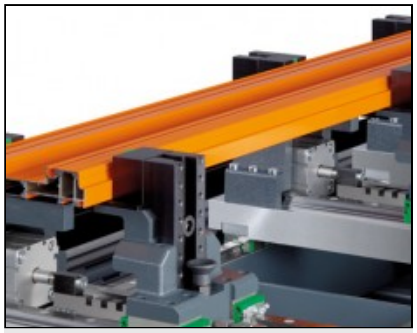

Profile machining centre SBZ 151 Edition 90

The new clamp concept

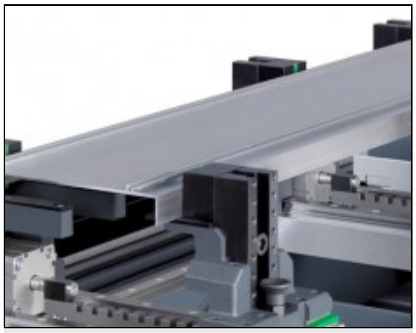

Profile machining centre SBZ 151 Edition 90

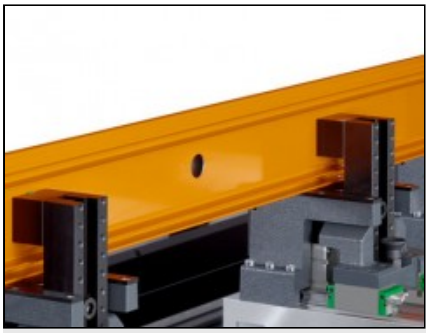

Profile machining centre SBZ 151 Edition 90

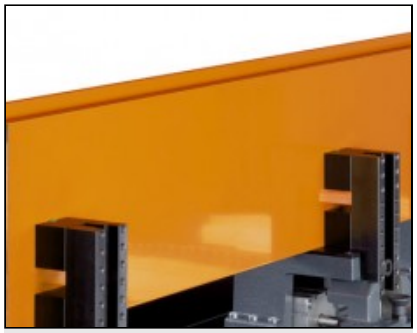

Profile machining centre SBZ 151 Edition 90

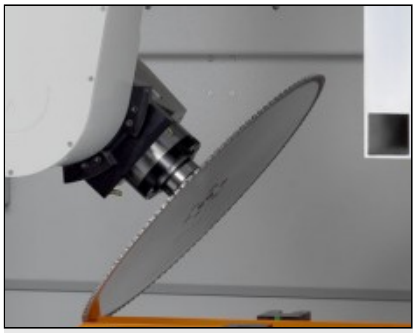

Profile machining centre SBZ 151 Edition 90

elumatec AG
Pinacher Straße, 61
75417 Mühlacker
Germany

Tel +49 7041-14-184
sales@elumatec.com
www.elumatec.com

The right to make technical alterations is reserved.

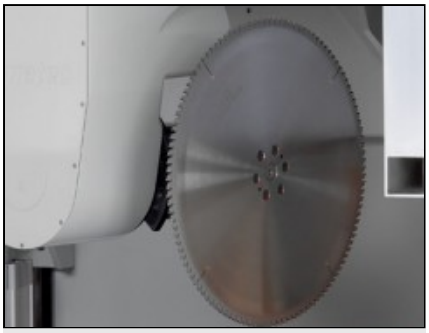

Profile machining centre SBZ 151 Edition 90

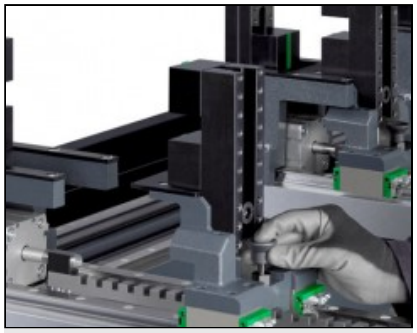

Profile machining centre SBZ 151 Edition 90

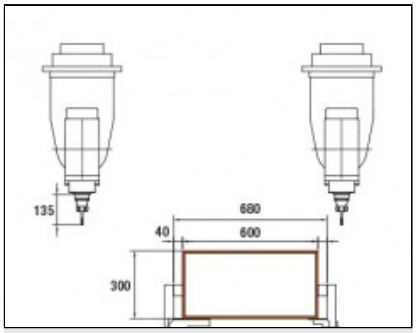

Profile machining centre SBZ 151 Edition 90

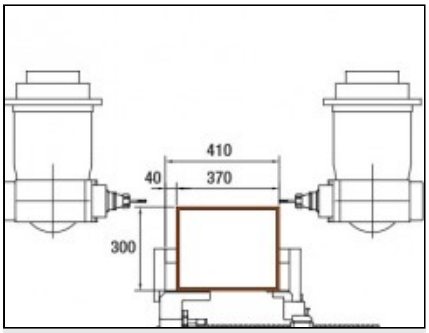

Profile machining centre SBZ 151 Edition 90

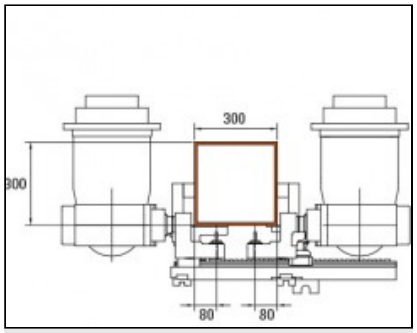

Profile machining centre SBZ 151 Edition 90

elumatec AG
Pinacher Straße, 61
75417 Mühlacker
Germany

Tel +49 7041-14-184
sales@elumatec.com
www.elumatec.com

The right to make technical alterations is reserved.