elumatec

a voilàp company

SBZ 140

PORTAL MACHINING CENTERS



- 4-axis profile machining centre
- Designed for economical and efficient machining of aluminium and thin-walled steel profiles
- Standard version with air-cooled router spindle (version with water-cooled router spindle available optionally)
- All operations, such as routing, drilling and tapping, are performed while the profile bar is stationary to protect the profile surfaces
- Machining with all tools at angles continuously adjustable from -90° to +90°
- Automatic clamp positioning with absolute measurement system
- The on-board tool magazine ensures that tool changing times are kept short, thereby optimizing machining cycles
- The magazine can be equipped with eight tools
- Up to two rotating angle heads with two different tools are optionally available for double-bar and end machining (0° – 90° – 180° – 270°) (optional)
- Two separate working zones enable machining in shuttle operation (optional). There is a central laser scanner on the operator's side to protect the area for maximum safety.
- 4-axis controller
- 18.5" colour display, USB ports and network connection
- Windows operating system
- eluCam

Machining lengths

SBZ 140 – 4.2 m

elumatec AG
Pinacher Straße, 61
75417 Mühlacker
Germany

Tel +49 7041-14-184
sales@elumatec.com
www.elumatec.com

The right to make technical alterations is reserved.

- Max. machining length with profile end machining, 4,200 mm
- Max. machining length without profile end machining, 4,320 mm

SBZ 140 – 7.6 m

- Max. machining length with profile end machining, 7,600 mm
- Max. machining length without profile end machining, 7,720 mm

SBZ 140 – 9.7 m

- Max. machining length with profile end machining, 9,700 mm
- Max. machining length without profile end machining, 9,820 mm

Options

- Shuttle operation for working on two sides
- Automatic length measurement on both sides
- Clamping unit accommodates double profile machining
- Barcode scanner
- Stationary tool magazine (16x)
- On-board tool changers for angle head or saw head
- Angle routing heads
- Saw head
- Tool holders
- Collet chucks
- Collets
- Tools
- eluCad (office software package for optimised production management)

elumatec AG
Pinacher Straße, 61
75417 Mühlacker
Germany

Tel +49 7041-14-184
sales@elumatec.com
www.elumatec.com

The right to make technical alterations is reserved.



SBZ 140 Profile machining centre



SBZ 140 Profile machining centre

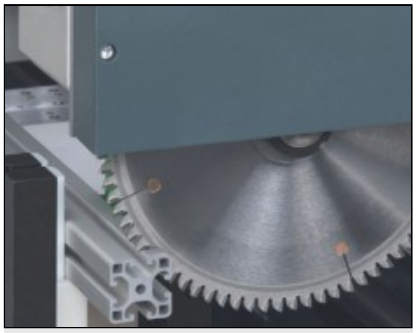

SBZ 140 Profile machining centre



SBZ 140 Profile machining centre



SBZ 140 Profile machining centre

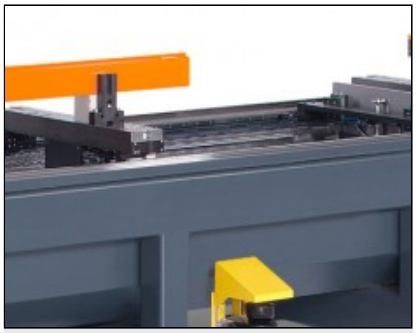

SBZ 140 Profile machining centre

elumatec AG
Pinacher Straße, 61
75417 Mühlacker
Germany

Tel +49 7041-14-184
sales@elumatec.com
www.elumatec.com

The right to make technical alterations is reserved.

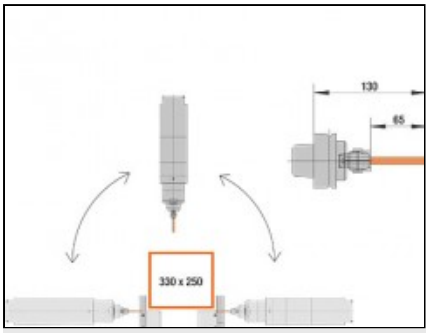

SBZ 140 Profile machining centre

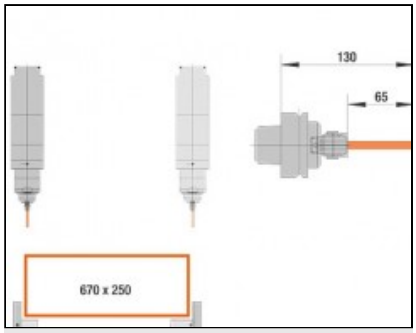

SBZ 140 Profile machining centre

elumatec AG
Pinacher Straße, 61
75417 Mühlacker
Germany

Tel +49 7041-14-184
sales@elumatec.com
www.elumatec.com

The right to make technical alterations is reserved.