elumatec

a voilàp company

SBZ 130

PORTAL MACHINING CENTERS



- 3-axis profile machining centre
- Designed for economical and efficient machining of aluminium, steel and stainless steel profiles
- All operations, such as routing, drilling and tapping, are performed while the profile bar is stationary to protect the profile surfaces
- The on-board turret head ensures that tool changing times are kept very short, thereby optimizing machining cycles
- The turret head can be equipped with eight tools or four angle routing heads
- Automatic clamp positioning enables the machine to position the material clamps
- 3-axis controller
- The tool spindle is designed as an additional axis
- Angle heads for lateral and profile end machining
- 18.5" panel PC, USB ports and network connection
- Windows operating system
- eluCam

Machining lengths

SBZ 130 – 4.2 m

- Max. machining length with profile end machining, 4,080 mm
- Max. machining length without profile end machining, 4,200 mm

elumatec AG
Pinacher Straße, 61
75417 Mühlacker
Germany

Tel +49 7041-14-184
sales@elumatec.com
www.elumatec.com

The right to make technical alterations is reserved.

- SBZ 130 – 7.2 m
- Max. machining length with profile end machining, 7,080 mm
- Max. machining length without profile end machining, 7,200 mm

- SBZ 130 – 8.5 m
- Max. machining length with profile end machining, 8,380 mm
- Max. machining length without profile end machining, 8,500 mm

- SBZ 130 – 10.2 m
- Max. machining length with profile end machining, 10,080 mm
- Max. machining length without profile end machining, 10,200 mm

- SBZ 130 – 11.5 m
- Max. machining length with profile end machining, 11,380 mm
- Max. machining length without profile end machining, 11,500 mm

Options

- Two separate working zones enable machining in shuttle operation. There is also a central laser scanner on the operator’s side to protect the area for maximum safety.
- Automatic length measurement
- Angle routing heads
- High-speed spindle
- Slow spindle
- Saw head
- Clamping unit accommodates double profile machining
- Barcode scanner
- Collet chucks
- Collets
- Tools
- eluCad (office software package for optimised production management)

elumatec AG
Pinacher Straße, 61
75417 Mühlacker
Germany

Tel +49 7041-14-184
sales@elumatec.com
www.elumatec.com

The right to make technical alterations is reserved.

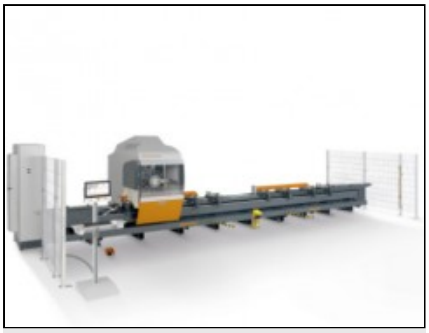

Profile machining centre SBZ 130 eluCam

SBZ 130 + special accessories



Profile machining centre SBZ 130 eluCam



Profile machining centre SBZ 130 eluCam

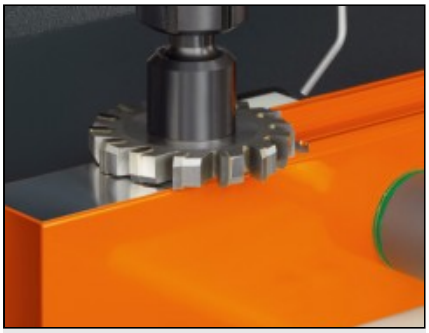

Profile machining centre SBZ 130 eluCam

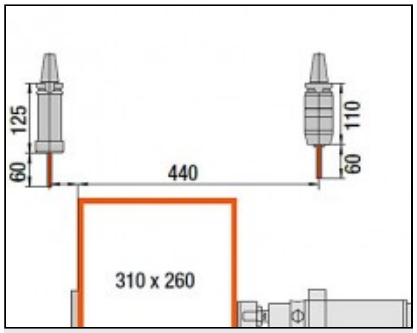

Profile machining centre SBZ 130 eluCam

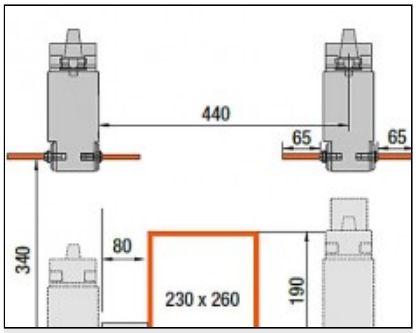

Profile machining centre SBZ 130 eluCam

elumatec AG
Pinacher Straße, 61
75417 Mühlacker
Germany

Tel +49 7041-14-184
sales@elumatec.com
www.elumatec.com

The right to make technical alterations is reserved.