elumatec

a voilàp company

SBZ 122/75

CABINET MACHINING CENTERS



- Designed for economical and efficient machining of aluminium, PVC and thin-walled steel profiles
- All operations, such as routing, drilling and tapping, are performed while the profile bar is stationary to protect the profile surfaces
- A-axis continuously adjustable from -120° to +120°
- C-axis continuously adjustable from -220° to +220°
- All five axes can move simultaneously with RTCP (Rotation Tool Centrepoint)
- The additional C-axis makes it possible to machine the face of profiles from the left and right
- Clamp positioning autonomous
- Better machining results thanks to the intelligent control technology
- Fast positioning of the machining unit with up to 120 m/min thanks to dynamic servo drives
- Tapping without compensation chuck
- The 2-axis add-on unit with the A-axis and C-axis can also accommodate a saw blade with a diameter of 180 mm
- Automatic clamp recognition and clamp positioning
- Ergonomic operation thanks to the advanced inclined bed
- Automatic tool changer with twelve tool tray positions (without tools)
- State-of-the-art 5-axis controller
- The absolute rotary encoder system means no main axis homing is required
- Automatic clamp recognition and positioning prevents collisions
- Power torque routing motor with enclosed speed control for short spindle start-up and braking times.
- Certified, drive-integrated safety functions
- Low power consumption thanks to the intelligent control technology
- DC link coupling in the axis drives for greater energy efficiency

elumatec AG
Pinacher Straße, 61
75417 Mühlacker
Germany

Tel +49 7041-14-184
sales@elumatec.com
www.elumatec.com

The right to make technical alterations is reserved.

- Uninterruptible power supply (UPS)
- Windows operating system
- 18.5" panel PC, i5 processor, USB ports and network connection
- Simple, stress-free program entry with eluCam on the operating panel, even during operation
- Remote online maintenance

Machine configuration

- Water-cooled 7 kW, S1 routing spindle
- Autonomous clamp positioning
- Automatic clamp recognition
- Enclosure to protect the operator
- Four horizontal, pneumatic material clamping units
- A material stop on the left
- Tool holder HSK-F63
- Swarf trays for swarf removal
- Minimum-volume lubrication system
- High performance cutting fluid
- Hand-held operator terminal
- Depth gauge

Options

- Tools
- Tool holders
- Saw blade, 180 mm
- Length measurement on both sides
- Additional stop for overlength machining (left)
- Material reference stop (right) for positioning workpieces with overlength machining
- Green Line cooling unit for the control cabinet with reduced energy consumption
- Barcode scanner
- Protective enclosure can optionally completely enclose the machine on all sides
- Four clamps as standard. Can be equipped with up to eight clamps
- Double clamping and other accessories on request
- 21.6" panel PC, i7 processor
- Note holder
- Sound insulation hood
- Clamping unit optimised to prevent collisions

elumatec AG
Pinacher Straße, 61
75417 Mühlacker
Germany

Tel +49 7041-14-184
sales@elumatec.com
www.elumatec.com

The right to make technical alterations is reserved.

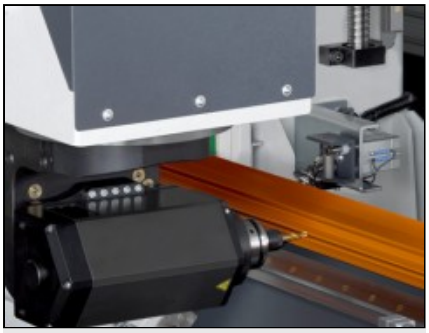

A-axis angle adjustment

Continuously adjustable angle setting from -120° to +120° C-axis



C-axis

Continuously adjustable angle setting from -220° to +220°. Enables profile end machining from the left and right.



Profile machining centre SBZ 122/75

The two-axis add-on unit with the A-axis and C-axis can also accommodate a saw blade with a diameter of 180 mm



Tool magazine

The tool magazine with 12-fold tool changer allows quick, easy setup and minimal secondary time

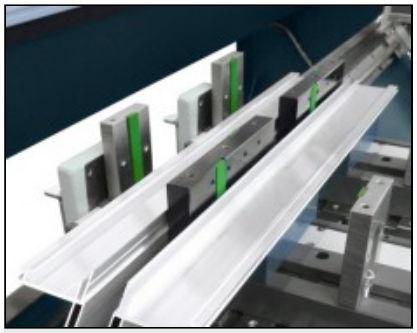

Profile machining centre SBZ 122/75

Double clamping unit

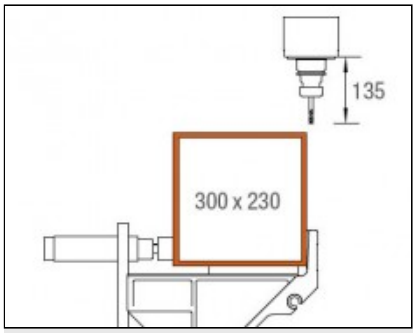

Machining area, Y and Z-axes

Profile machining from above

elumatec AG
Pinacher Straße, 61
75417 Mühlacker
Germany

Tel +49 7041-14-184
sales@elumatec.com
www.elumatec.com

The right to make technical alterations is reserved.

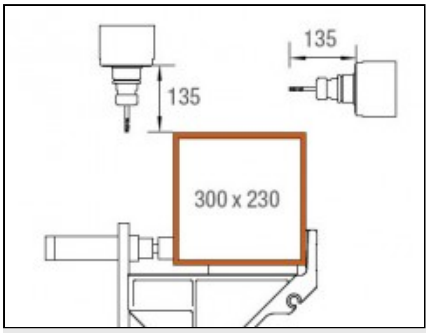

Machining area, Y and Z-axes

Profile machining from above and from behind

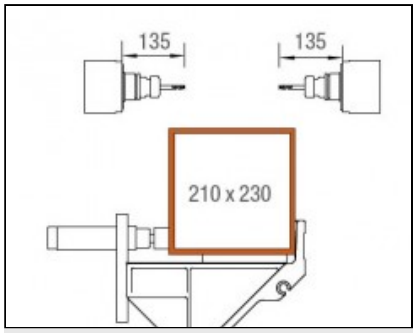

Machining area, Y and Z-axes

Profile machining from the front and from behind

elumatec AG
Pinacher Straße, 61
75417 Mühlacker
Germany

Tel +49 7041-14-184
sales@elumatec.com
www.elumatec.com

The right to make technical alterations is reserved.