elumatec

a voilàp company

SBZ 122/74

CABINET MACHINING CENTERS



elumatec AG
Pinacher Straße, 61
75417 Mühlacker
Germany

Tel +49 7041-14-184
sales@elumatec.com
www.elumatec.com

The right to make technical alterations is reserved.

Designed for economical and efficient machining of aluminium, PVC and thin-walled steel profiles
All operations, such as routing, drilling and tapping, are performed while the profile bar is stationary to protect the profile surfaces
A-axis continuously adjustable from -120° to +120°
Clamp positioning autonomous
Better machining results thanks to the intelligent control technology
Fast positioning of the machining unit with up to 120 m/min thanks to dynamic servo drives
Tapping without compensation chuck
Automatic clamp recognition and clamp positioning
Automatic tool changer with twelve tool tray positions (without tools)
State-of-the-art 4-axis controllera
Ergonomic operation thanks to the advanced inclined bed
The absolute rotary encoder system means no main axis homing is required
Automatic clamp recognition and positioning prevents collisions
Power torque routing motor with enclosed speed control for short spindle start-up and braking times.
Certified, drive-integrated safety functions
Low power consumption thanks to the intelligent control technology
DC link coupling in the axis drives for greater energy efficiency
Uninterruptible power supply (UPS)
Windows operating system
18.5" panel PC, i5 processor, USB ports and network connection
Simple, stress-free program entry with eluCam on the operating panel, even during operation
Remote online maintenance

Machine configuration

- Water-cooled 7 kW, S1 routing spindle
- Autonomous clamp positioning
- Automatic clamp recognition
- Enclosure to protect the operator
- Four horizontal, pneumatic material clamping units
- A material stop on the left
- Tool holder HSK-F63
- Swarf trays for swarf removal
- Minimum-volume lubrication system
- High performance cutting fluid
- Hand-held operator terminal
- Depth gauge

Options

- Tools
- Tool holders
- Length measurement on both sides
- Additional stop for overlength machining (left)
- Material reference stop (right) for positioning workpieces with overlength machining
- Green Line cooling unit for the control cabinet with reduced energy consumption
- Barcode scanner

elumatec AG
Pinacher Straße, 61
75417 Mühlacker
Germany

Tel +49 7041-14-184
sales@elumatec.com
www.elumatec.com

The right to make technical alterations is reserved.

- Protective enclosure can optionally completely enclose the machine on all sides
- Four clamps as standard. Can be equipped with up to eight clamps
- Double clamping and other accessories on request
- 21.6" panel PC, i7 processor
- Note holder
- Sound insulation hood
- Clamping unit optimised to prevent collisions

elumatec AG
Pinacher Straße, 61
75417 Mühlacker
Germany

Tel +49 7041-14-184
sales@elumatec.com
www.elumatec.com

The right to make technical alterations is reserved.

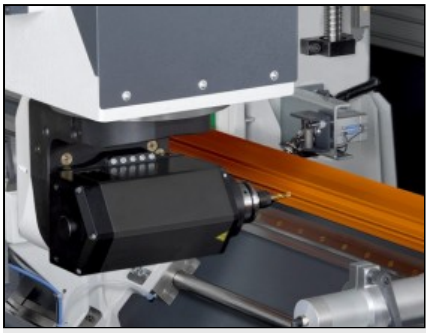

A-axis angle adjustment

Continuously adjustable angle setting from -120° to +120°



Profile machining centre SBZ 122/74



Profile machining centre SBZ 122/74



Tool magazine

The tool magazine with 12-fold tool changer allows quick, easy setup and minimal secondary time

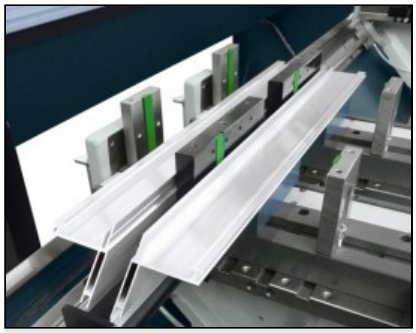

Double clamping

Double clamping unit

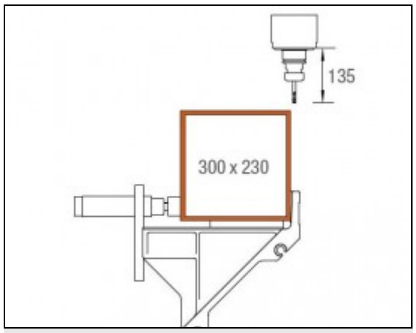

Machining area, Y and Z-axes

Profile machining from above

elumatec AG
Pinacher Straße, 61
75417 Mühlacker
Germany

Tel +49 7041-14-184
sales@elumatec.com
www.elumatec.com

The right to make technical alterations is reserved.

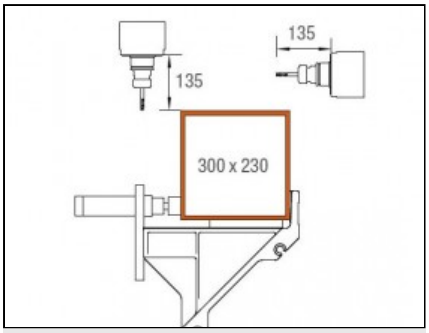

Machining area, Y and Z-axes

Profile machining from above and from behind

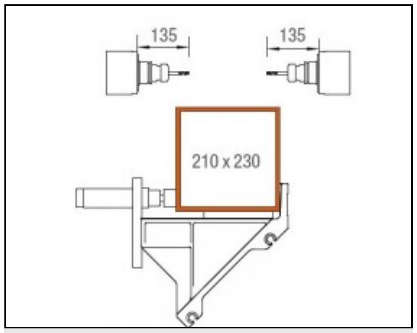

Machining area, Y and Z-axes

Profile machining from the front and from behind

elumatec AG
Pinacher Straße, 61
75417 Mühlacker
Germany

Tel +49 7041-14-184
sales@elumatec.com
www.elumatec.com

The right to make technical alterations is reserved.