RMT

ASSEMBLY TABLES

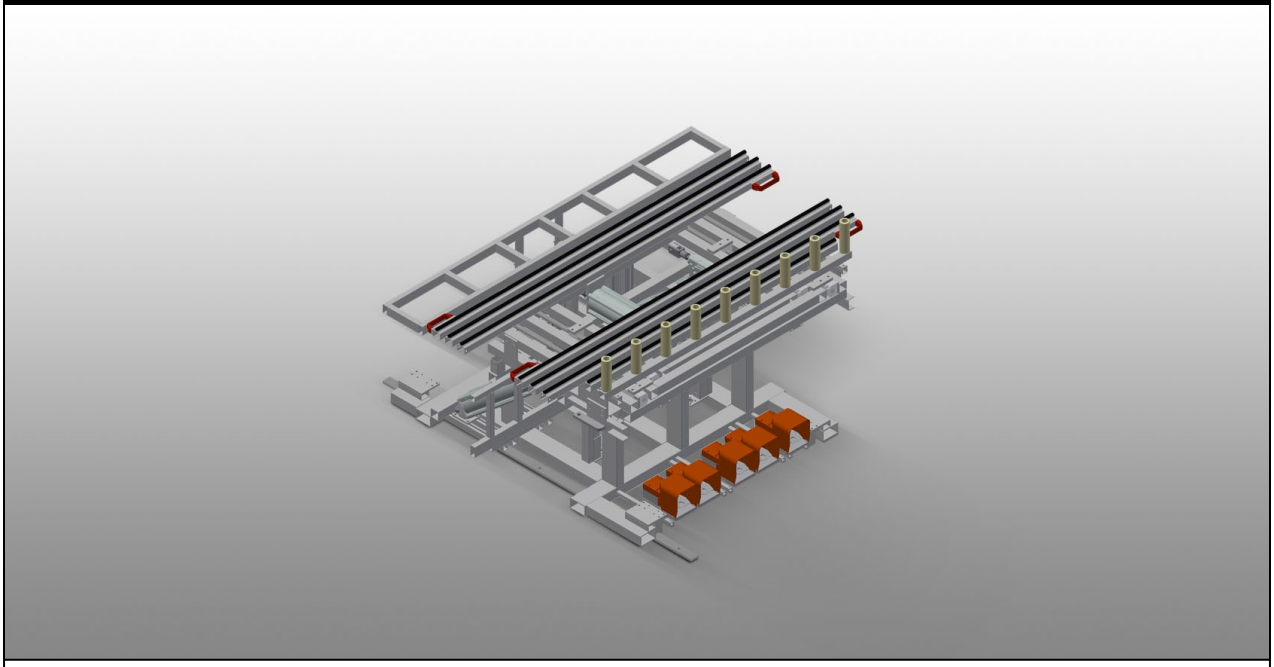

Stable steel construction. Tilting assembly table with draw-in unit. Basic dimensions 1,400 x 2,000 mm, when pulled out 2,000 x 2,800 mm. Pull-out work platform consisting of two supporting beams, clad with brush strip. Minimum size of work platform 2,000 x 1,000 mm. Maximum size of work platform 2,800 x 2,000 mm. Two supporting beams form a frame, the height of which can be adjusted pneumatically and continuously from 1,000 to 2,000 mm. Lifting and tilting unit with foot valve. Fixed roller conveyor with lifting unit, 100 mm. Lifting unit for transferring / receiving from the roller conveyor. Roller conveyor open at front for drawing in to transfer roller conveyor. Mobility unit with flanged rollers and pneumatic fixing brake with operation from side. Optional: Table supporting surface with felt profile strip for RMT 1400. Auxiliary clamp with hand valve.

elumatec AG
Pinacher Straße, 61
75417 Mühlacker
Germany

Tel +49 7041-14-184
sales@elumatec.com
www.elumatec.com

The right to make technical alterations is reserved.

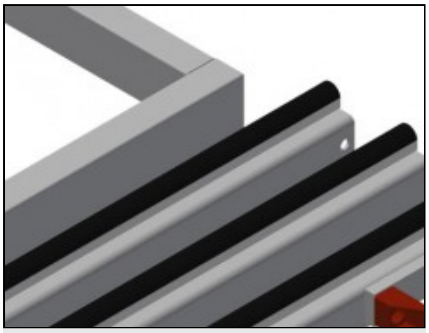

Supporting surface

Table supporting surface with brush strips

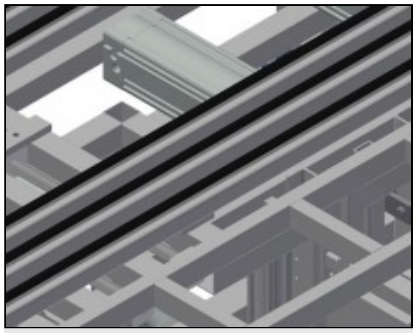

Worktable

Height of support table adjustable to 230 mm below the work surface. Depth of support table 250 mm, length 2,000 mm

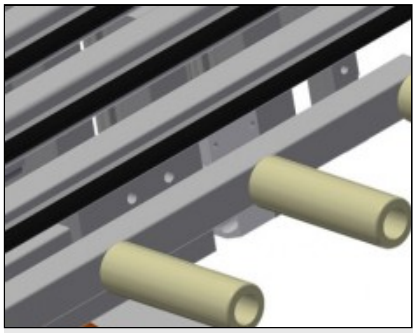

Roller support

Roller conveyor open at front for drawing in to transfer roller conveyor. Fixed roller conveyor with lifting unit, 100 mm Lifting unit for transferring / receiving from the roller conveyor.

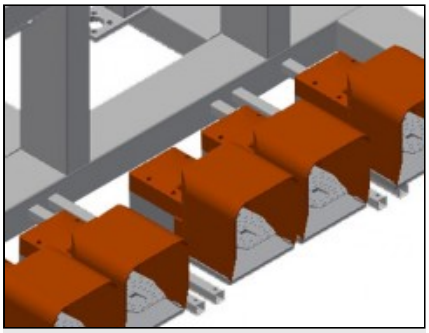

Foot switch

Control via foot valve. Lifting and tilting unit with foot valve

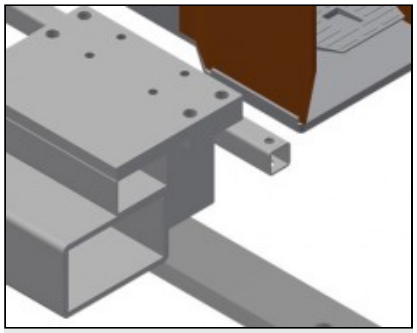

Mobility unit

Mobility unit with flanged rollers and pneumatic fixing brake with operation from both sides

elumatec AG
Pinacher Straße, 61
75417 Mühlacker
Germany

Tel +49 7041-14-184
sales@elumatec.com
www.elumatec.com

The right to make technical alterations is reserved.

RMT / ASSEMBLY TABLES

MODELS

RMT 1400



DIMENSION AND WEIGHT

Length (mm)	2.000
Width (mm)	1.620
Height (mm)	450

SUPPORTING SURFACE

Length of support table (mm)	2.000
Depth of support table (mm)	200
Working height (mm)	950
Tilt of supporting surface	8°
Roller conveyor length (mm)	1.600
Roller diameter (mm)	50
Roller length (mm)	150
Load capacity (kg)	300

Included ● Available ○

elumatec AG
Pinacher Straße, 61
75417 Mühlacker
Germany

Tel +49 7041-14-184
sales@elumatec.com
www.elumatec.com

The right to make technical alterations is reserved.