RF

TROLLEYS

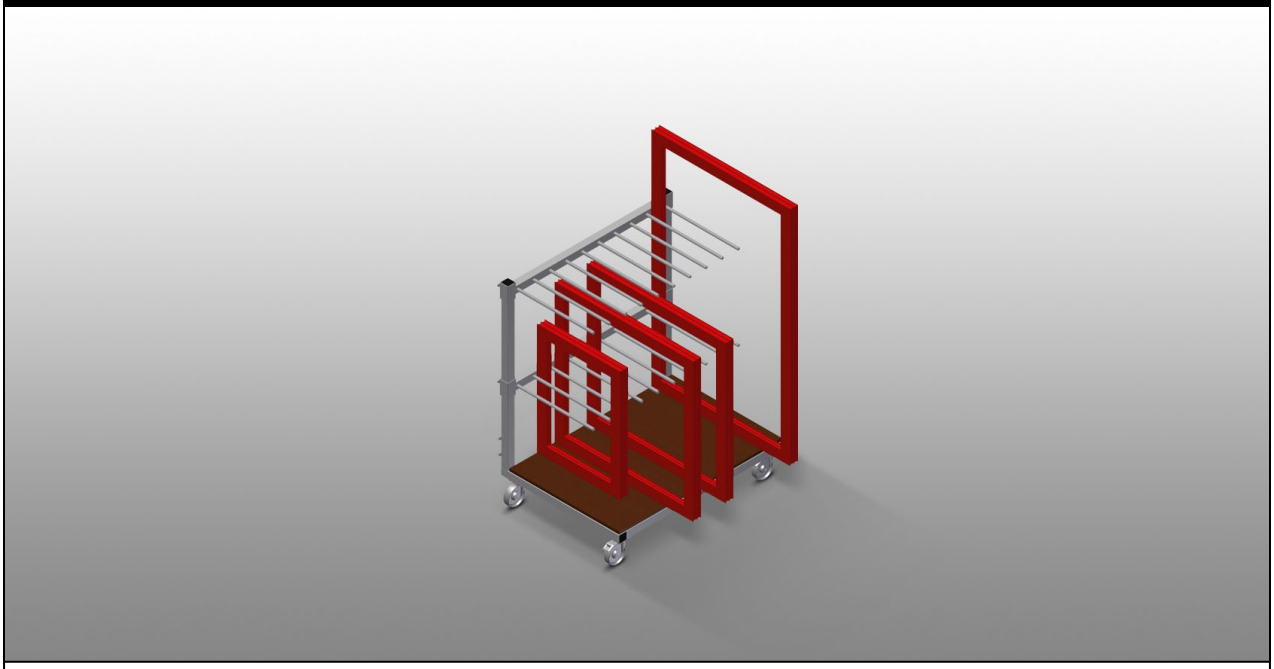

Profile trolley for in-house transportation of frames and sashes. Stable steel construction. Trolley with sorting rack for transportation and storage of frames and sashes. Hardwood supporting surface. Compartment dividers for nine frames. Compartment divider height is adjustable. Four swivel castors, two of which with locking stop.

elumatec AG
Pinacher Straße, 61
75417 Mühlacker
Germany

Tel +49 7041-14-184
sales@elumatec.com
www.elumatec.com

The right to make technical alterations is reserved.

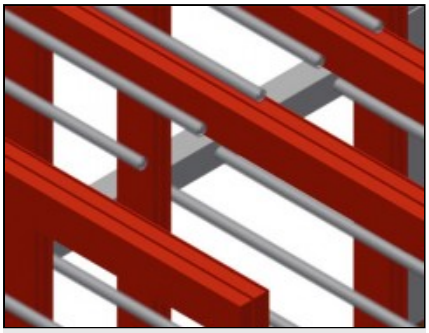

Easy loading and unloading

Direct access to each element

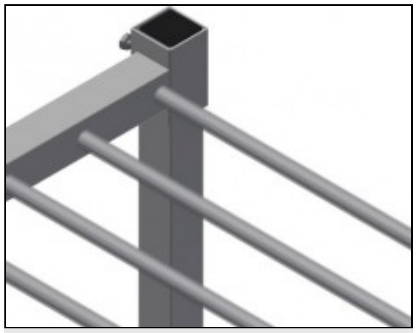

Compartment dividers

Compartment divider height is adjustable, Compartment width 100 mm, Compartment depth 540 mm

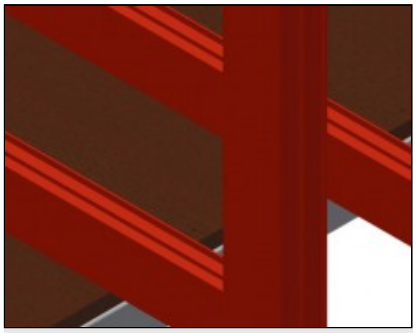

Supporting surface

Lower supporting surface made of hardwood

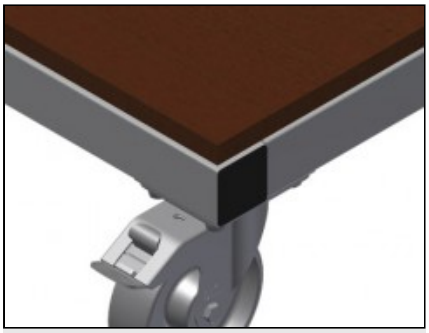

Casters

Four casters, two of which have a fixing brake, provide a high degree of mobility and easy, safe handling

elumatec AG
Pinacher Straße, 61
75417 Mühlacker
Germany

Tel +49 7041-14-184
sales@elumatec.com
www.elumatec.com

The right to make technical alterations is reserved.

RF / TROLLEYS

MODELS

RF 1000

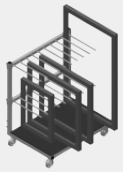

DIMENSION AND WEIGHT

Length (mm)	1.180
Width (mm)	850
Height (mm)	1.360
Weight (kg)	65

STORAGE CAPACITY

Compartment dividers	2
Compartments	9
Compartment width (mm)	100
Compartment depth (mm)	540
Support height (mm)	1.150
Load capacity (kg)	400

CHARACTERISTICS

Plastic protection	○
Swivel castors	4
Swivel castors with locking stop	2
Swivel castors diameter (mm)	125

Included ● Available ○

elumatec AG
Pinacher Straße, 61
75417 Mühlacker
Germany

Tel +49 7041-14-184
sales@elumatec.com
www.elumatec.com

The right to make technical alterations is reserved.