PWW

TROLLEYS

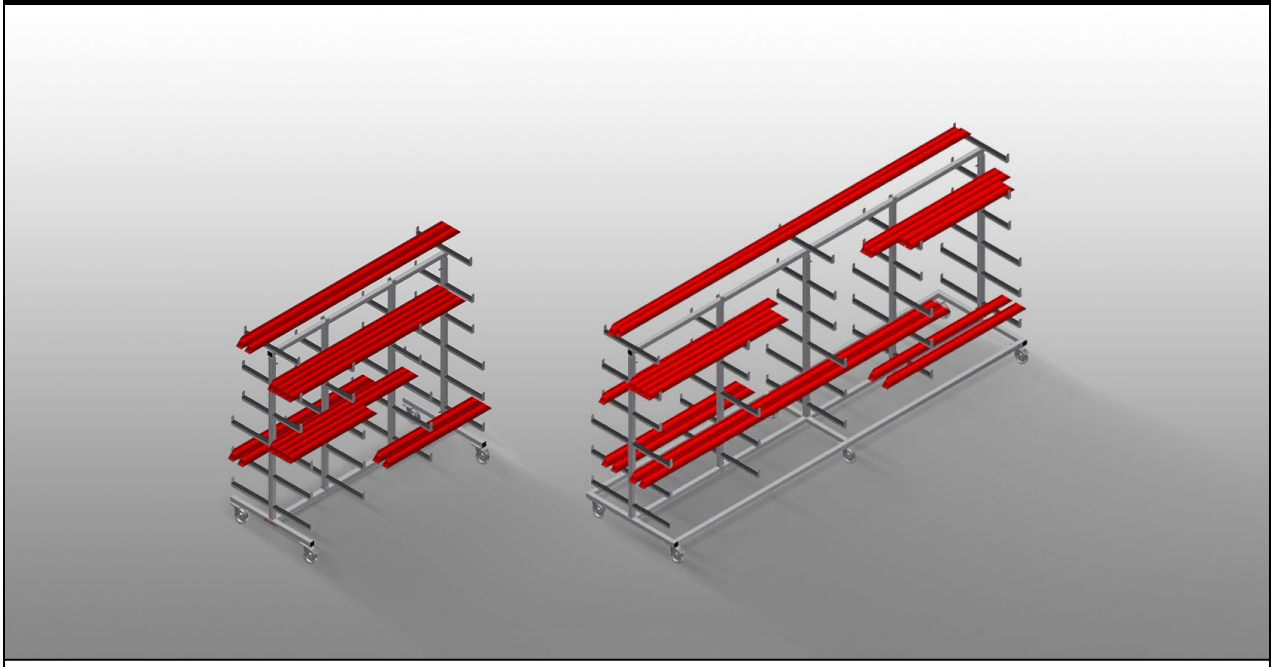

Profile trolley for horizontal storage and transportation of profiles. Stable steel construction. Horizontal profile transportation. Easy transportation of profile raw materials and cut-to-size profiles. Support arms are rubber coated. Profile trolley with profile supports on both sides. Six supports per upright.
PWW 1000: One centre upright. Four swivel castors, two of which with locking stop.
PWW 2000: Two centre uprights. Four swivel castors, two of which with locking stop.
PWW 4000: Three centre uprights. Six swivel castors, two of which with locking stop.

elumatec AG
Pinacher Straße, 61
75417 Mühlacker
Germany

Tel +49 7041-14-184
sales@elumatec.com
www.elumatec.com

The right to make technical alterations is reserved.

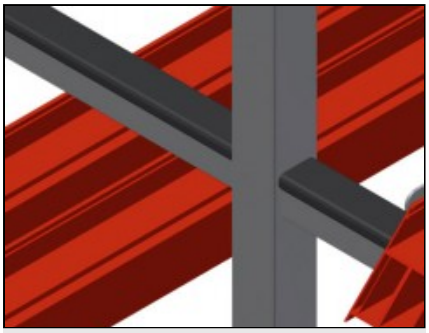

Easy loading and unloading

Well-organised storage provides quick access

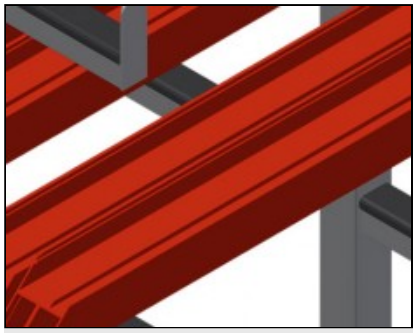

Support arms

Support arms are rubber coated.Adjustable centre upright

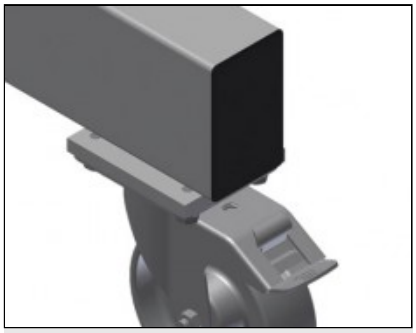

Casters

Four casters, two of which have a fixing brake, provide a high degree of mobility and easy, safe handling

elumatec AG
Pinacher Straße, 61
75417 Mühlacker
Germany

Tel +49 7041-14-184
sales@elumatec.com
www.elumatec.com

The right to make technical alterations is reserved.

PWW / TROLLEYS

MODELS

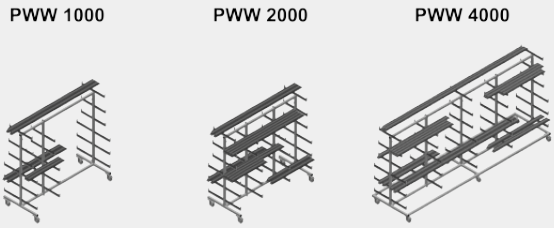

DIMENSION AND WEIGHT

PWW 1000 / PWW 2000 / PWW 4000

Length (mm)	1.625 / 2.000 / 4.000
Width (mm)	900 / 900 / 1.000
Height (mm)	1.960
Weight (kg)	60 / 75 / 130

STORAGE CAPACITY

PWW 1000 / PWW 2000 / PWW 4000

Shelves	11
Clearance (mm)	260
Lower shelf width (mm)	420
Upper shelf width (mm)	300
Load capacity (kg)	350 / 350 / 500

elumatec AG
Pinacher Straße, 61
75417 Mühlacker
Germany

Tel +49 7041-14-184
sales@elumatec.com
www.elumatec.com

The right to make technical alterations is reserved.

CHARACTERISTICS

PWW 1000 / PWW 2000 / PWW 4000	
Centre upright	1 / 2 / 3
Swivel castors	4 / 4 / 6
Swivel castors with locking stop	2
Swivel castors diameter (mm)	125
PWW 1000 / PWW 2000	
Individual centre upright	○

Included ● Available ○

elumatec AG
Pinacher Straße, 61
75417 Mühlacker
Germany

Tel +49 7041-14-184
sales@elumatec.com
www.elumatec.com

The right to make technical alterations is reserved.