elumatec

a voilàp company

PWS

TROLLEYS

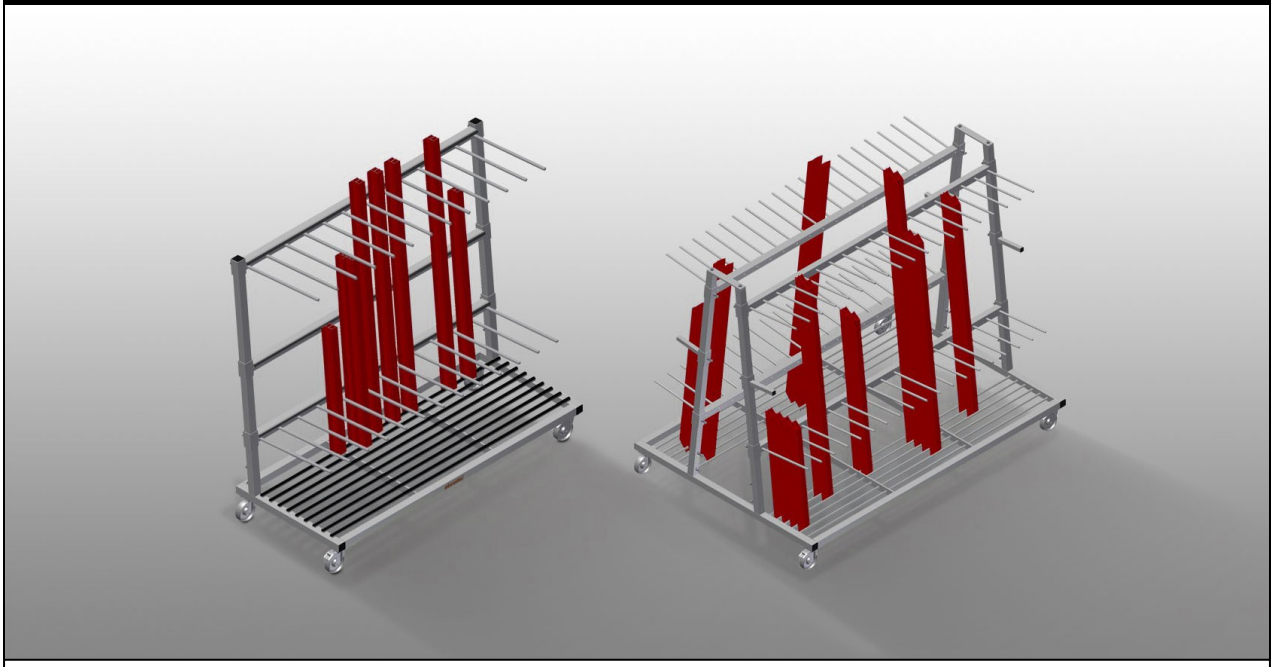

Profile trolley for vertical storage and transportation of aluminium profiles. Stable steel construction. Ideal for transportation and space-saving intermediate storage of cut-to-length profiles. Easy loading and unloading. Compartment divider height is adjustable. Four swivel castors, two of which with locking stop.
PWS 1000: Vertical profile transportation. Profile trolley with loading on one side. Sufficient for 30-40 profile bars. Supporting surface with bar grid floor.
PWS 1400: Vertical profile transportation. Sufficient for 30-40 profile bars. Lower supporting surface with rubber strips. Compartment dividers with protective tubing. Rear back support with rubber strips.
PWS 1800: Vertical profile transportation. Sufficient for 12-60 profile bars. Lower supporting surface with rubber strips. Compartment dividers with protective tubing. Rear back support with rubber strips.
PWS 2000: Vertical profile transportation. Profile trolley with loading on one side. Sufficient for 60-80 profile bars. Supporting surface with bar grid floor.
PWS 4000: Vertical profile transportation. Profile trolley can be loaded on both sides. 18 compartments per side. Sufficient for 120-160 profile bars. Supporting surface with bar grid floor.

elumatec AG
Pinacher Straße, 61
75417 Mühlacker
Germany

Tel +49 7041-14-184
sales@elumatec.com
www.elumatec.com

The right to make technical alterations is reserved.

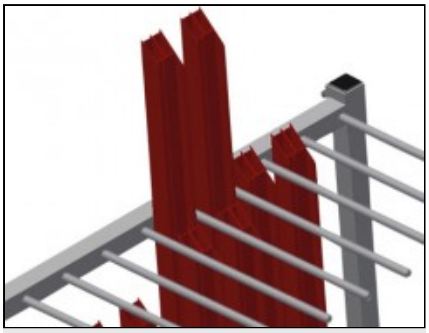

Easy loading and unloading PWS 1000 / PWS 2000

Profile trolley with loading on one side

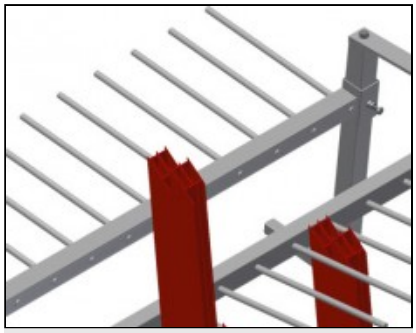

Easy loading and unloading PWS 4000

Profile trolley with loading on two sides

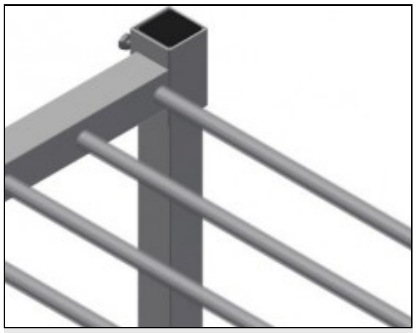

Compartment dividers PWS 1000 / PWS 2000

Compartment divider height is adjustable, Compartment width 100 mm, Compartment depth 540 mm

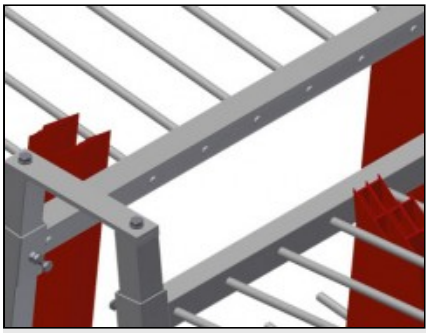

Compartment dividers PWS 4000

Compartment divider height is adjustable, Compartment width 100 mm, Compartment depth 400 mm

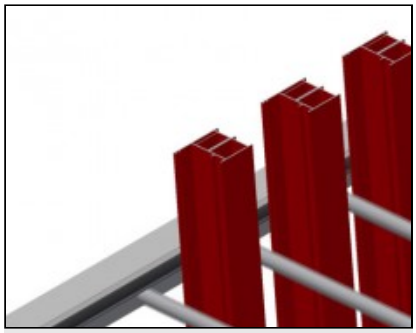

Compartment divider with plastic protector PWS 1400 / PWS 1800

Compartment divider height is adjustable. All supporting surfaces have a non-slip PVC cladding which protects surfaces from damage during storage



Supporting surface PWS 1000 / PWS 2000

Supporting surface with bar grid floor

elumatec AG
Pinacher Straße, 61
75417 Mühlacker
Germany

Tel +49 7041-14-184
sales@elumatec.com
www.elumatec.com

The right to make technical alterations is reserved.

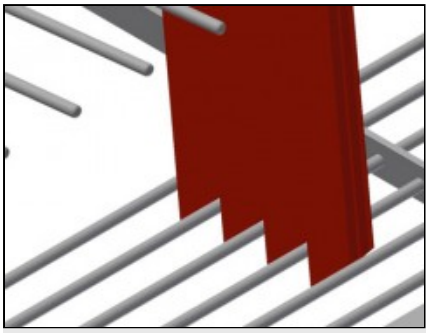

Supporting surface PWS 4000

Supporting surface with bar grid floor

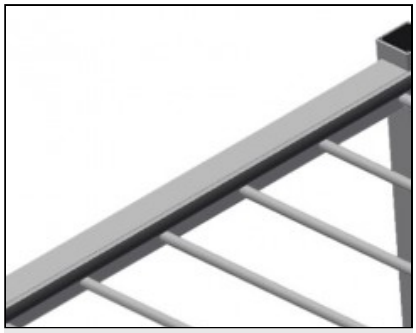

Back support with rubber strips PWS 1400 / PWS 1800

Rear supporting surfaces equipped with rubber strips protect profiles from damage

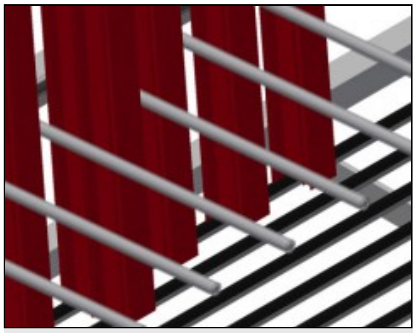

Lower supporting surfaces with rubber strips PWS 1400 / PWS 1800

Lower supporting surfaces equipped with rubber strips to protect the profiles from damage

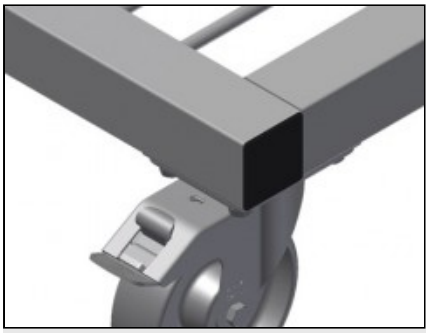

Casters

Four casters, two of which have a fixing brake, provide a high degree of mobility and easy, safe handling

elumatec AG
Pinacher Straße, 61
75417 Mühlacker
Germany

Tel +49 7041-14-184
sales@elumatec.com
www.elumatec.com

The right to make technical alterations is reserved.

PWS / TROLLEYS

MODELS

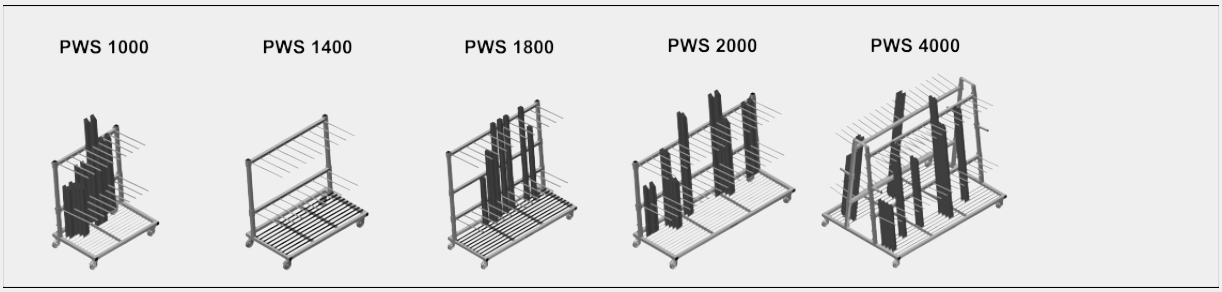

DIMENSION AND WEIGHT

PWS 1000 / PWS 1400 / PWS 1800 / PWS 2000 / PWS 4000

Length (mm)	1.200 / 1.440 / 1.880 / 2.230 / 2.230
Width (mm)	800 / 790 / 800 / 800 / 1.560
Height (mm)	1.360 / 1.360 / 1.700 / 1.360 / 1.850
Weight (kg)	60 / 72 / 105 / 105 / 200

STORAGE CAPACITY

PWS 1000 / PWS 1400 / PWS 1800 / PWS 2000 / PWS 4000

Compartment dividers	2 / 2 / 2 / 2 / 4
Compartments	9 / 9 / 12 / 18 / 36
Compartment width (mm)	100 / 120 / 120 / 100 / 100
Compartment depth (mm)	540 / 540 / 540 / 540 / 400
Support height (mm)	1.150 / 1.150 / 1.500 / 1.150 / 1.620
Load capacity (kg)	350 / 350 / 350 / 350 / 600
Quantity of profile bars	30-40 / 30-40 / 12-60 / 60-80 / 120-160

PWS 4000

Compartments per side	18

elumatec AG
Pinacher Straße, 61
75417 Mühlacker
Germany

Tel +49 7041-14-184
sales@elumatec.com
www.elumatec.com

The right to make technical alterations is reserved.

CHARACTERISTICS

PWS 1000 / PWS 1400 / PWS 1800 / PWS 2000	
Profile trolley with loading on one side	●
PWS 4000	
Profile trolley can be loaded on both sides	●
PWS 1000 / PWS 2000 / PWS 4000	
Supporting surface with bar grid floor	●
Compartment dividers with protective tubing	○
PWS 1400 / PWS 1800	
Compartment dividers with protective tubing	●
Lower supporting surface with rubber strips	●
Rear back support with rubber strips	●
PWS 1800	
Additional height adjustable compartment divider with plastic protection	○
PWS 1000 / PWS 1400 / PWS 1800 / PWS 2000 / PWS 4000	
Swivel castors diameter (mm)	125

Included ● Available ○

elumatec AG
Pinacher Straße, 61
75417 Mühlacker
Germany

Tel +49 7041-14-184
sales@elumatec.com
www.elumatec.com

The right to make technical alterations is reserved.