PLW

TROLLEYS

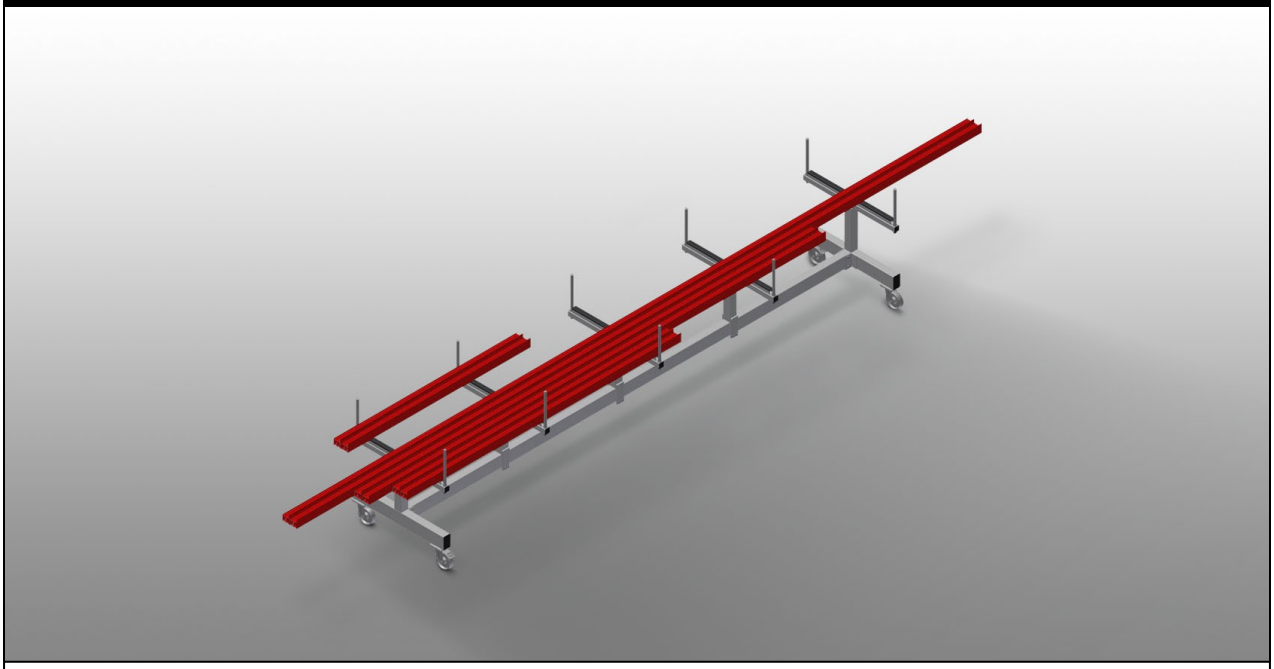

Trolley for storage and transportation of profiles. Stable steel construction. Trolley for transportation and storage of profile bars before and after cutting. Well-organised storage provides quick access. Ideal transportation option for curtain wall construction. The trolley can also be used as a mobile intermediate storage area, for example, before moving onward to the double mitre saw or machining centre. Profile support arms can be adjusted. Profile supports with rubber surface. Four swivel castors, two of which with locking stop.

elumatec AG
Pinacher Straße, 61
75417 Mühlacker
Germany

Tel +49 7041-14-184
sales@elumatec.com
www.elumatec.com

The right to make technical alterations is reserved.

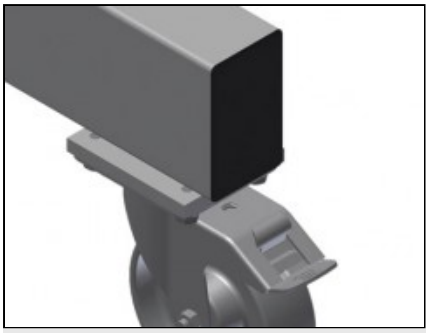

Casters

Four casters, two of which have a fixing brake, provide a high degree of mobility and easy, safe handling

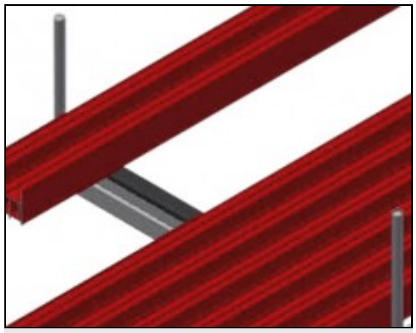

Supporting surfaces

Supporting surfaces clad with rubber protect profiles from damage

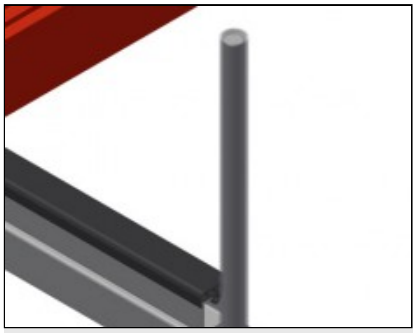

Guards with plastic protector

Vertical guards with plastic protectors protect the profiles from damage and prevent them from slipping off

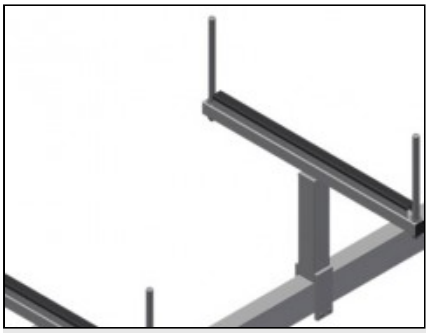

Profile support

Profile supports can be adjusted

elumatec AG
Pinacher Straße, 61
75417 Mühlacker
Germany

Tel +49 7041-14-184
sales@elumatec.com
www.elumatec.com

The right to make technical alterations is reserved.

PLW / TROLLEYS

MODELS

PLW 4000

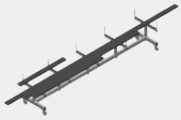

DIMENSION AND WEIGHT

Length (mm)	4.000
Width (mm)	800
Height (mm)	900
Weight (kg)	100

STORAGE CAPACITY

Width of the support arms (mm)	750
Height of the guards (mm)	270
Load capacity (kg)	600

CHARACTERISTICS

Swivel castors	4
Swivel castors with locking stop	2
Swivel castors diameter (mm)	125

Included ● Available ○

elumatec AG
Pinacher Straße, 61
75417 Mühlacker
Germany

Tel +49 7041-14-184
sales@elumatec.com
www.elumatec.com

The right to make technical alterations is reserved.