PHW

TROLLEYS

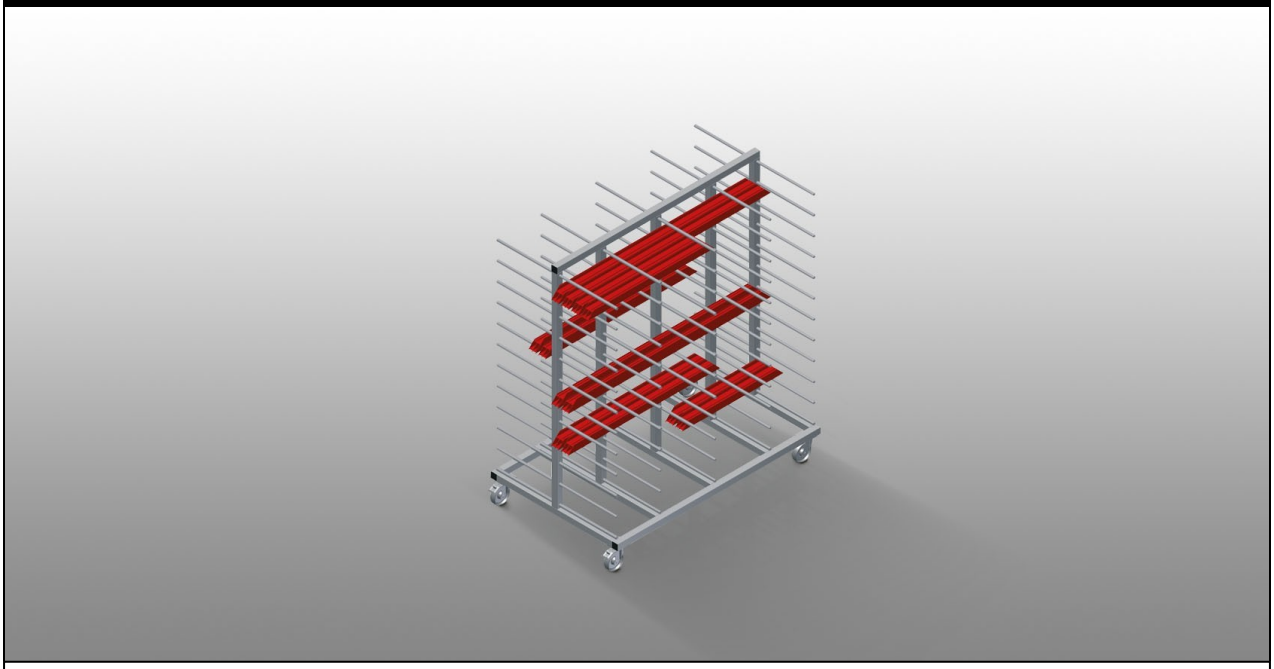

Profile trolley for horizontal storage and transportation of profiles. Stable steel construction. Horizontal profile transportation. Profile trolley with profile supports on both sides. Twelve storage areas per upright. Four swivel castors, two of which with locking stop.

elumatec AG
Pinacher Straße, 61
75417 Mühlacker
Germany

Tel +49 7041-14-184
sales@elumatec.com
www.elumatec.com

The right to make technical alterations is reserved.

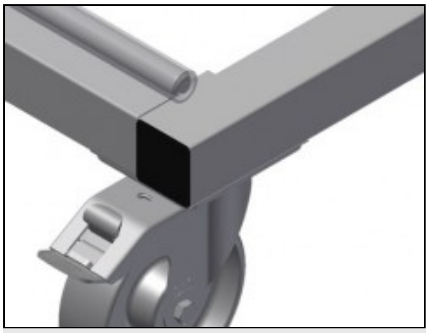

Casters

Four casters, two of which have a fixing brake, provide a high degree of mobility and easy, safe handling



Support arms

Compartment width 120 mm, Compartment depth 450 mm, easy loading and unloading, well-organised storage provides quick access

elumatec AG
Pinacher Straße, 61
75417 Mühlacker
Germany

Tel +49 7041-14-184
sales@elumatec.com
www.elumatec.com

The right to make technical alterations is reserved.

PHW / TROLLEYS

MODELS

PHW 1600

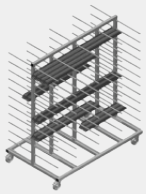

PHW 2000

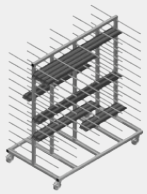

DIMENSION AND WEIGHT

PHW 1600 / PHW 2000

Length (mm)	1.600 / 2.000
Width (mm)	1.000
Height (mm)	1.850
Weight (kg)	140 / 150

STORAGE CAPACITY

Shelves	24
Clearance (mm)	120
Compartment width (mm)	450
Load capacity (kg)	350

CHARACTERISTICS

Plastic protection	○
Number labels	○
Swivel castors	4
Swivel castors with locking stop	2
Swivel castors diameter (mm)	125

Included ● Available ○

elumatec AG
Pinacher Straße, 61
75417 Mühlacker
Germany

Tel +49 7041-14-184
sales@elumatec.com
www.elumatec.com

The right to make technical alterations is reserved.