MTA

ASSEMBLY TABLES

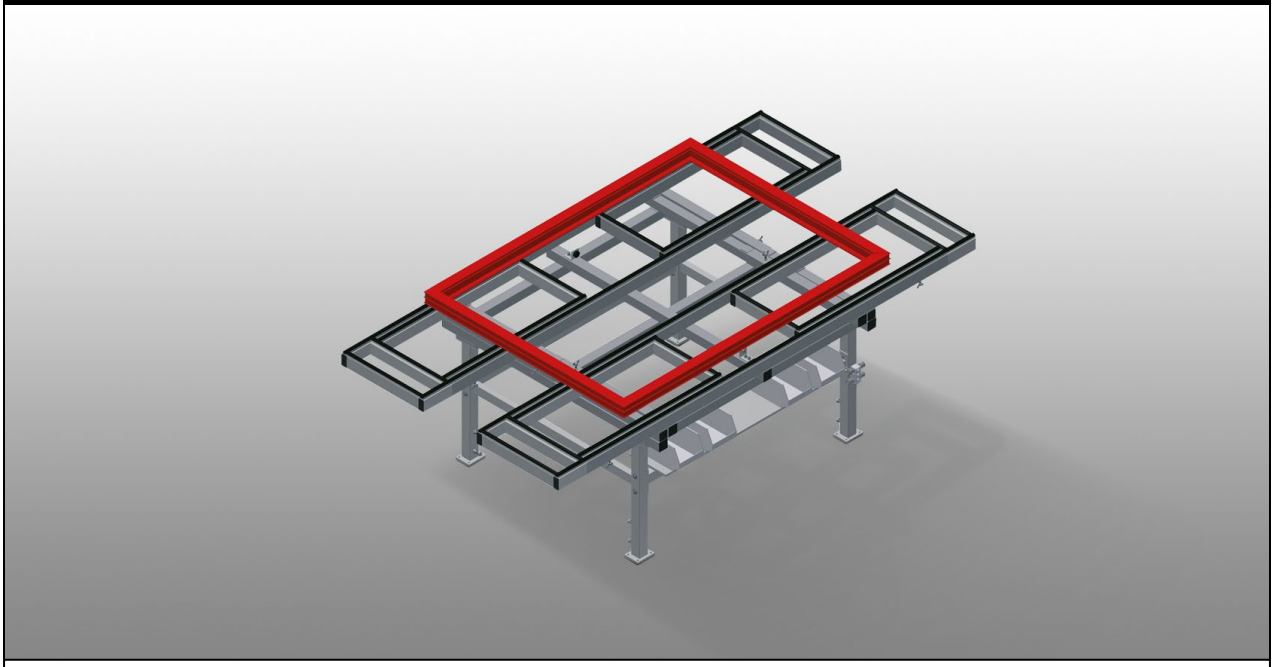

Assembly table expandable for all work tasks on frames and sashes. Stable steel construction. Universal assembly table. Pull-outs on four sides. Ideal for large elements. Adjustable height. Table supporting surface with plastic slide bars. Practical storage area under the table surface. Four PVC containers for small accessories, hardware and screws. 4-fold compressed air supply. Simple installation with a modular system design.

elumatec AG
Pinacher Straße, 61
75417 Mühlacker
Germany

Tel +49 7041-14-184
sales@elumatec.com
www.elumatec.com

The right to make technical alterations is reserved.

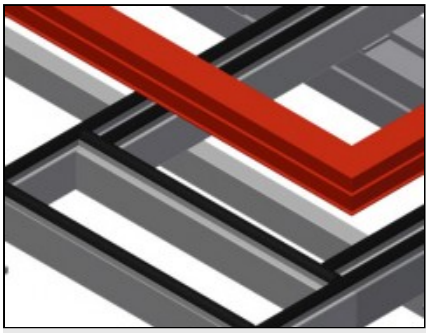

Supporting surfaces

Supporting surfaces with plastic slide bars

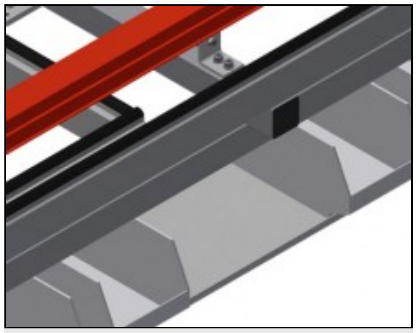

Storage area

Practical storage area under the table surface with 4 PVC containers for small accessories, hardware and screws

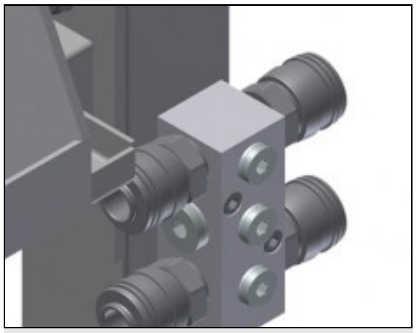

4-fold compressed air connection

4-fold compressed air connection for connecting compressed-air tools

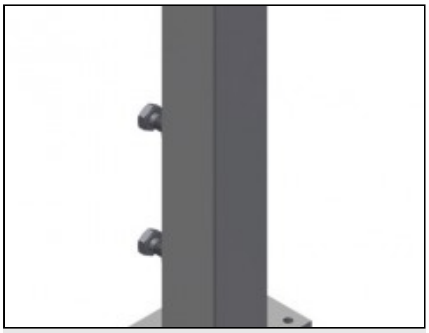

Height adjustment

Adjustable height; working height can be set to 850 – 1,000 mm by means of adjustable feet

elumatec AG
Pinacher Straße, 61
75417 Mühlacker
Germany

Tel +49 7041-14-184
sales@elumatec.com
www.elumatec.com

The right to make technical alterations is reserved.

MTA / ASSEMBLY TABLES

MODELS

MTA 3000

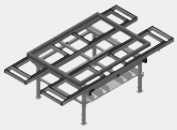

DIMENSION AND WEIGHT

Length (mm)	2.400 ÷ 4.000
Width (mm)	1.300 ÷ 1.900
Height (mm)	850 ÷ 1.000
Weight (kg)	160

SUPPORTING SURFACE

Adjustable height	●
Table brush strip supporting surface	○
Table felt profile strip supporting surface	○
Table rubber knob profile	○

CHARACTERISTICS

Storage area under the table surface	●
PVC containers	4
4-fold compressed air supply	●
Castor wheel Stand Alone (2 castors + 2 fixed)	○

Included ● Available ○

elumatec AG
Pinacher Straße, 61
75417 Mühlacker
Germany

Tel +49 7041-14-184
sales@elumatec.com
www.elumatec.com

The right to make technical alterations is reserved.