MT

ASSEMBLY TABLES

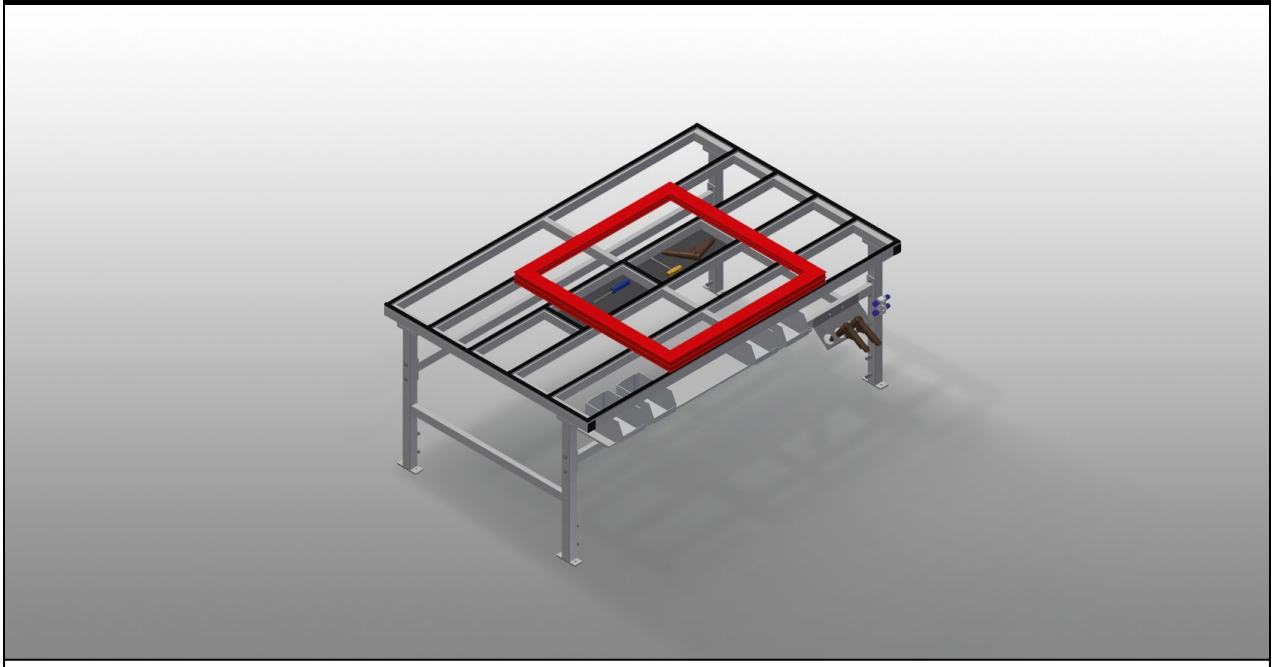

Assembly table for all work tasks on frames and sashes. Stable steel construction. Table supporting surface with plastic slide bars. Storage tray for setting down tools and accessories. Adjustable height. Practical storage area under the table surface. Four PVC containers for small accessories, hardware and screws. 4-fold compressed air supply. Simple installation with a modular system design.

elumatec AG
Pinacher Straße, 61
75417 Mühlacker
Germany

Tel +49 7041-14-184
sales@elumatec.com
www.elumatec.com

The right to make technical alterations is reserved.

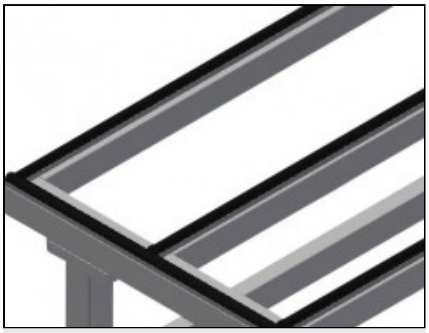

Supporting surfaces

Supporting surfaces with plastic slide bars

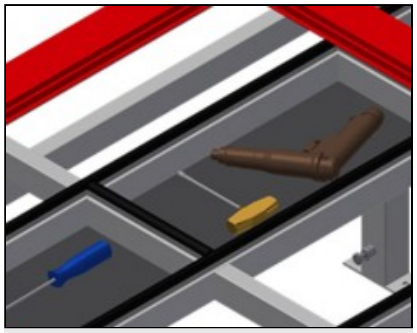

Storage tray

Storage tray for setting down tools and accessories

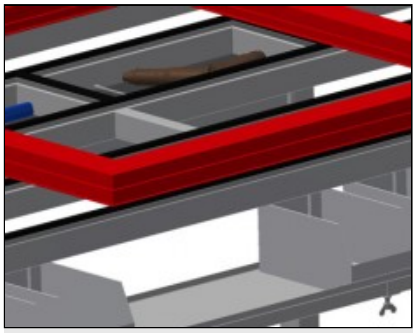

Storage area

Storage area with four plastic trays for small accessories, hardware and screws



Height adjustment

Adjustable height; working height can be set to 850 – 1,000 mm by means of adjustable feet

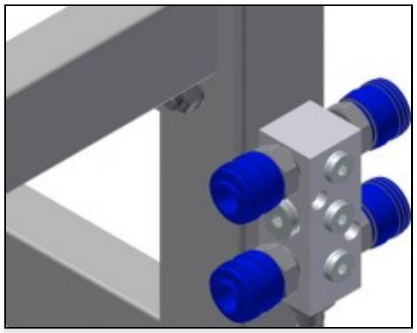

4-fold compressed air connection

4-fold compressed air connection for connecting compressed-air tools

elumatec AG
Pinacher Straße, 61
75417 Mühlacker
Germany

Tel +49 7041-14-184
sales@elumatec.com
www.elumatec.com

The right to make technical alterations is reserved.

MT / ASSEMBLY TABLES

MODELS

MT 2000



MT 3000



DIMENSION AND WEIGHT

MT 2000 / MT 3000

Length (mm)	2.000 / 3.000
Width (mm)	1.300
Height (mm)	850 ÷ 1.000
Weight (kg)	100 / 120

SUPPORTING SURFACE

Adjustable height	●
Storage tray for setting down tools and accessories	●
Table brush strip supporting surface	○
Table felt profile strip supporting surface	○
Table rubber knob profile	○

CHARACTERISTICS

Storage area under the table surface	●
PVC containers	4
4-fold compressed air supply	●
Tool holder	○
Service unit 1/4 with 4-fold air connections, Festo	○
Double two-pin grounded socket 230V 16A AP	○
Castor wheel Stand Alone (2 castors + 2 fixed)	○

Included ● Available ○

elumatec AG
Pinacher Straße, 61
75417 Mühlacker
Germany

Tel +49 7041-14-184
sales@elumatec.com
www.elumatec.com

The right to make technical alterations is reserved.