MS

ASSEMBLY TABLES



Assembly table for vertical assembly. Stable steel construction. Ideal for vertical assembly. Suitable for lines. Infinitely variable intermediate positions for ergonomic working. Height adjustment by means of pneumatic cylinder. Roller support with steel rollers. Table supporting surface with plastic slide bars. Two horizontally adjustable profile clamps. 4-fold compressed air supply.

elumatec AG
Pinacher Straße, 61
75417 Mühlacker
Germany

Tel +49 7041-14-184
sales@elumatec.com
www.elumatec.com

The right to make technical alterations is reserved.

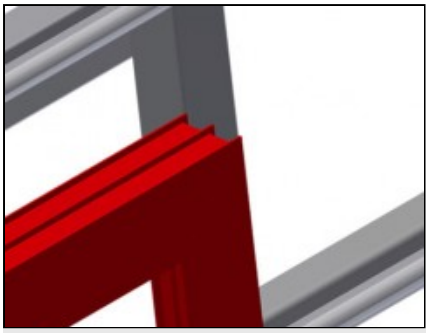

Supporting surfaces

Supporting surfaces with plastic slide bars

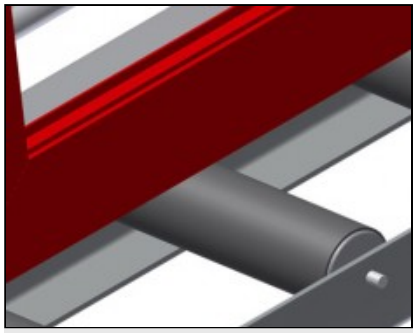

Roller support

Lower roller conveyor with support roller, L = 200 mm

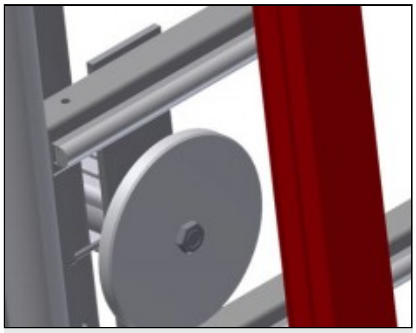

Clamps

Two material clamps at the side fix the profile while working, profile clamping height, max. 200 mm

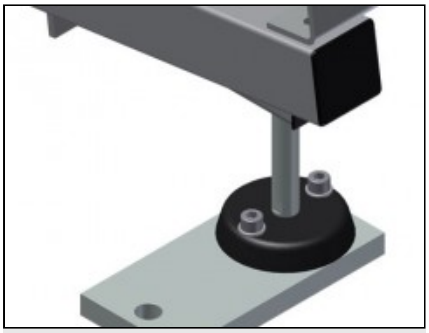

Height adjustment

Adjustable height; working height can be set by means of adjustable feet

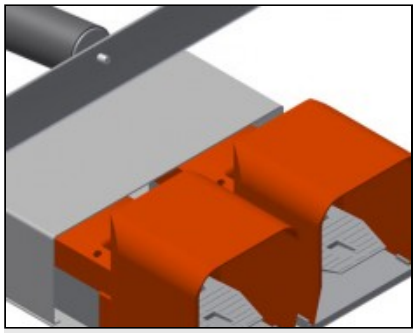

Foot switch

Control via foot valve. Height adjustable pneumatically by 500 mm in the vertical position, clamping is pneumatic

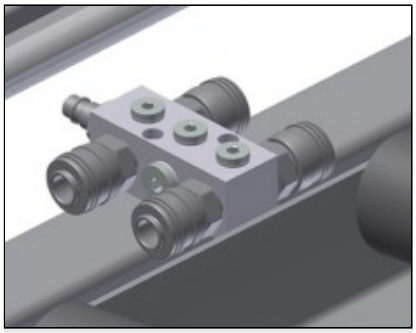

4-fold compressed air connection

4-fold connection for compressed-air tools

elumatec AG
Pinacher Straße, 61
75417 Mühlacker
Germany

Tel +49 7041-14-184
sales@elumatec.com
www.elumatec.com

The right to make technical alterations is reserved.

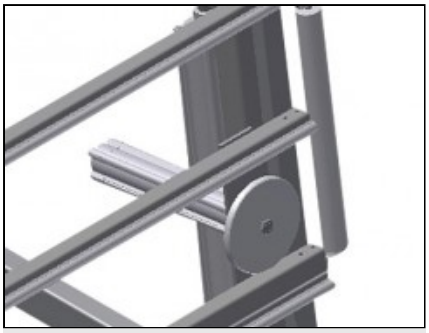

Lead-in rollers

Protective rollers for beginning or end of roller conveyor

elumatec AG
Pinacher Straße, 61
75417 Mühlacker
Germany

Tel +49 7041-14-184
sales@elumatec.com
www.elumatec.com

The right to make technical alterations is reserved.

MS / ASSEMBLY TABLES

MODELS

MS 3000



MS 4000



DIMENSION AND WEIGHT

MS 3000 / MS 4000

Length (mm)	3.110 / 4.110
Width (mm)	1.200
Vertical height (mm)	2.050
Roller conveyor width (mm)	200
Weight (kg)	330 / 370

SUPPORTING SURFACE

Pneumatic height adjustment (mm)	500
Pneumatic vertical height adjustment	●
Pull-out profile support	○
Profile protectors for support rollers	○
Load capacity (kg)	300

elumatec AG
Pinacher Straße, 61
75417 Mühlacker
Germany

Tel +49 7041-14-184
sales@elumatec.com
www.elumatec.com

The right to make technical alterations is reserved.

CHARACTERISTICS

Horizontally adjustable profile clamps	2
Positionable profile clamps	○
Holder plate L=290 mm	○
End stop	○
4-fold compressed air supply	●
Mobility unit	○
Rail 2,0 m left and right	○
Operating air pressure (bar)	7
Air consumption approx. (l/min)	35

Included ● Available ○

elumatec AG
Pinacher Straße, 61
75417 Mühlacker
Germany

Tel +49 7041-14-184
sales@elumatec.com
www.elumatec.com

The right to make technical alterations is reserved.