MGS 142

SINGLE MITRE-SAWS

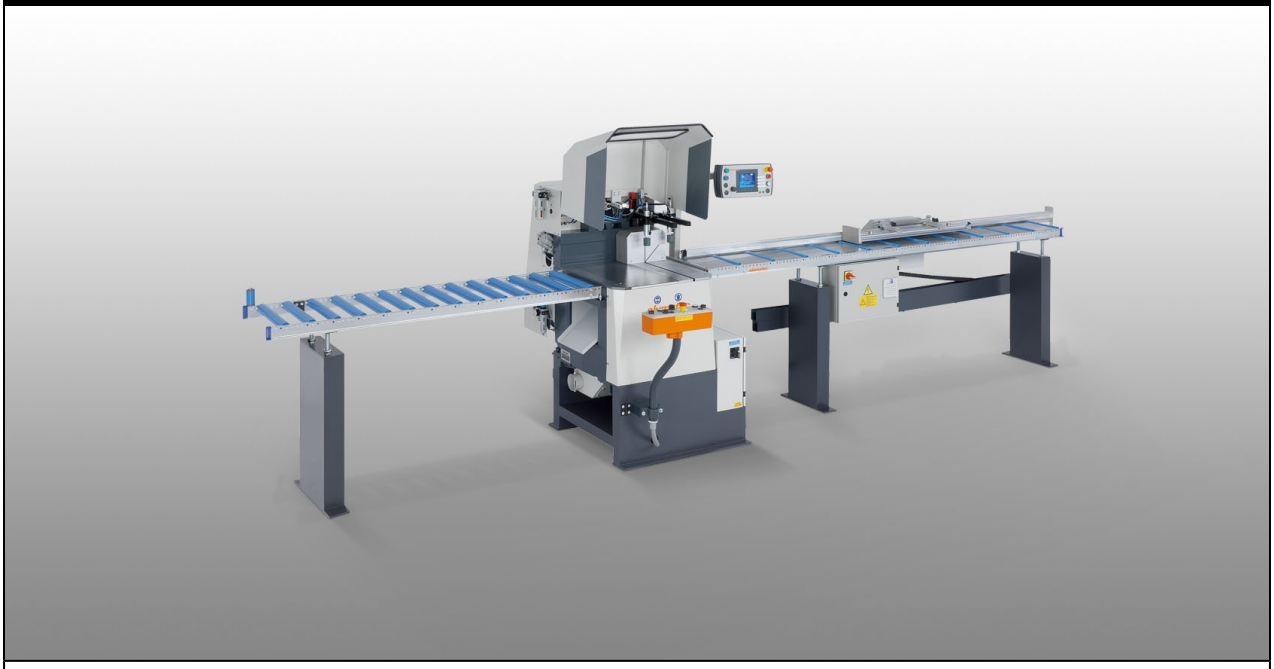

- The ideal mitre saw for industrial series production
- Safety hood opens automatically
- Equipped with exhaust connectors on the workpiece fences as standard
- Pulsed coolant system
- Profile feed from the left and material stop on the right
- Equipped with saw blade as standard

Options

- Hydro-pneumatic saw feed
- Horizontal material clamping units
- Extraction system
- Length stop and measuring systems
- Intermediate angle setting by hand wheel and E 111 digital display (not for MGS 142/31)
- Roller conveyors
- Saw blades
- High performance cutting fluid
- Motor with 5.5 kW power output

Mitre saw MGS 142/21

See MGS 142 /11, however:

- Profile feed from the right and stop on the left

Mitre saw MGS 142/31

elumatec AG
Pinacher Straße, 61
75417 Mühlacker
Germany

Tel +49 7041-14-184
sales@elumatec.com
www.elumatec.com

The right to make technical alterations is reserved.

See MGS 142/11, however:

- With kerf spreading to achieve the very best cutting quality. No re-cutting by the saw blade
- Tilting range 90° fix
- Length 910 mm, depth 1,335 mm, height 1,840 mm, weight 580 kg

elumatec AG
Pinacher Straße, 61
75417 Mühlacker
Germany

Tel +49 7041-14-184
sales@elumatec.com
www.elumatec.com

The right to make technical alterations is reserved.



Mitre saw MGS 142/31

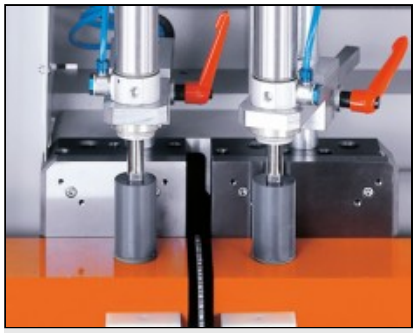

Troncatrice per tagli obliqui MGS 142/31

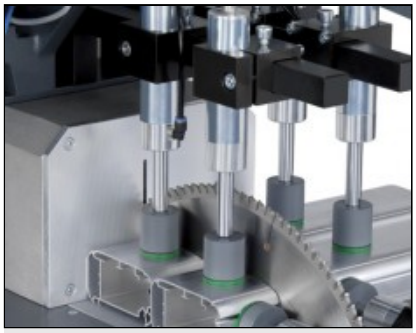

Cutting diagram MGS 142/11

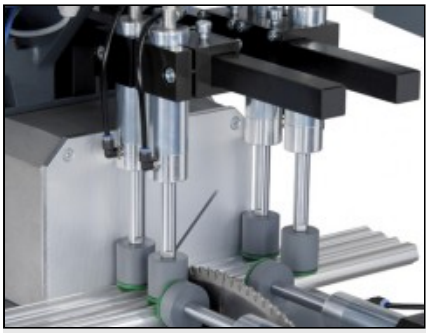

Cutting diagram MGS 142/11



Cutting diagram MGS 142/11

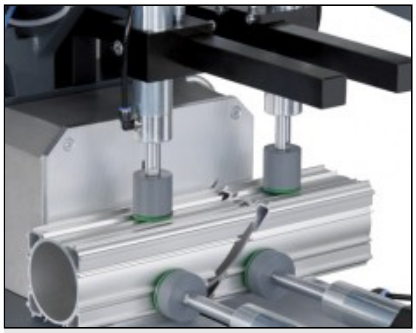

Cutting diagram MGS 142/11

elumatec AG
Pinacher Straße, 61
75417 Mühlacker
Germany

Tel +49 7041-14-184
sales@elumatec.com
www.elumatec.com

The right to make technical alterations is reserved.

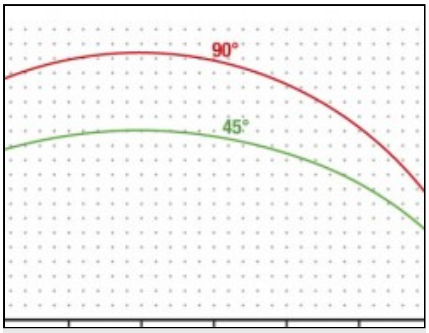

Mitre saw MGS 142

Cutting diagram MGS 142

elumatec AG
Pinacher Straße, 61
75417 Mühlacker
Germany

Tel +49 7041-14-184
sales@elumatec.com
www.elumatec.com

The right to make technical alterations is reserved.