MB

ASSEMBLY TABLES

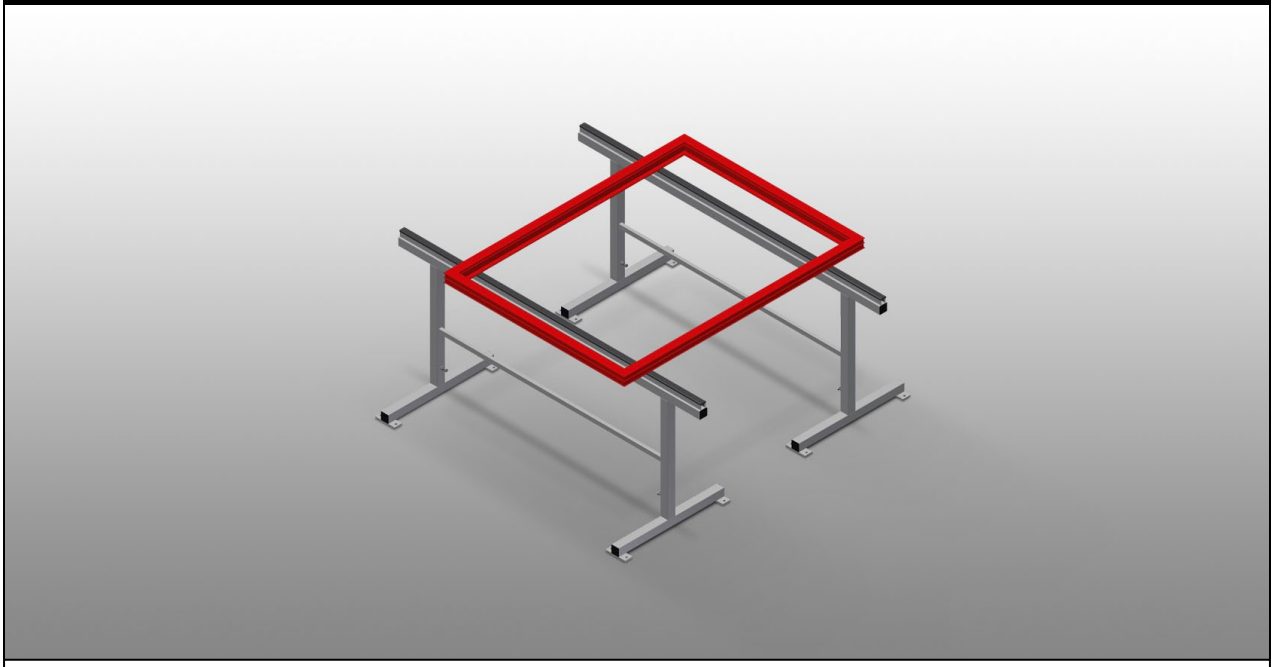

Assembly stands for working on large window elements. Stable steel construction. Assembly stand 2.0 m long. Simple installation with a modular system design. Rubber profile supporting surface. Set of assembly stands (1 pair). Adjustable height.

elumatec AG
Pinacher Straße, 61
75417 Mühlacker
Germany

Tel +49 7041-14-184
sales@elumatec.com
www.elumatec.com

The right to make technical alterations is reserved.

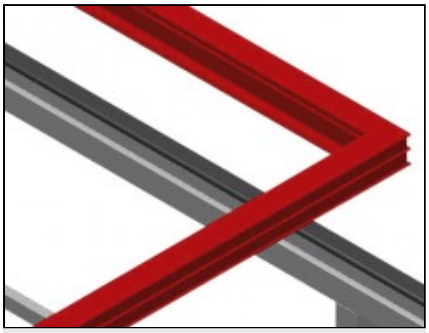

Supporting surfaces

Supporting surfaces with rubber profile

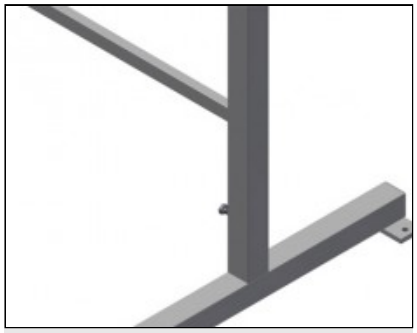

Height adjustment

Adjustable height 850 – 1,000 mm

elumatec AG
Pinacher Straße, 61
75417 Mühlacker
Germany

Tel +49 7041-14-184
sales@elumatec.com
www.elumatec.com

The right to make technical alterations is reserved.

MB / ASSEMBLY TABLES

MODELS

MB 2000



DIMENSION AND WEIGHT

Length (mm)	2.000
Width (mm)	700
Height (mm)	850 ÷ 1.000
Weight (kg)	40

SUPPORTING SURFACE

Assembly stand length (m)	2
Set of assembly stands: 1 pair	●
Rubber profile supporting surface	●

Included ● Available ○

elumatec AG
Pinacher Straße, 61
75417 Mühlacker
Germany

Tel +49 7041-14-184
sales@elumatec.com
www.elumatec.com

The right to make technical alterations is reserved.