KW

TROLLEYS

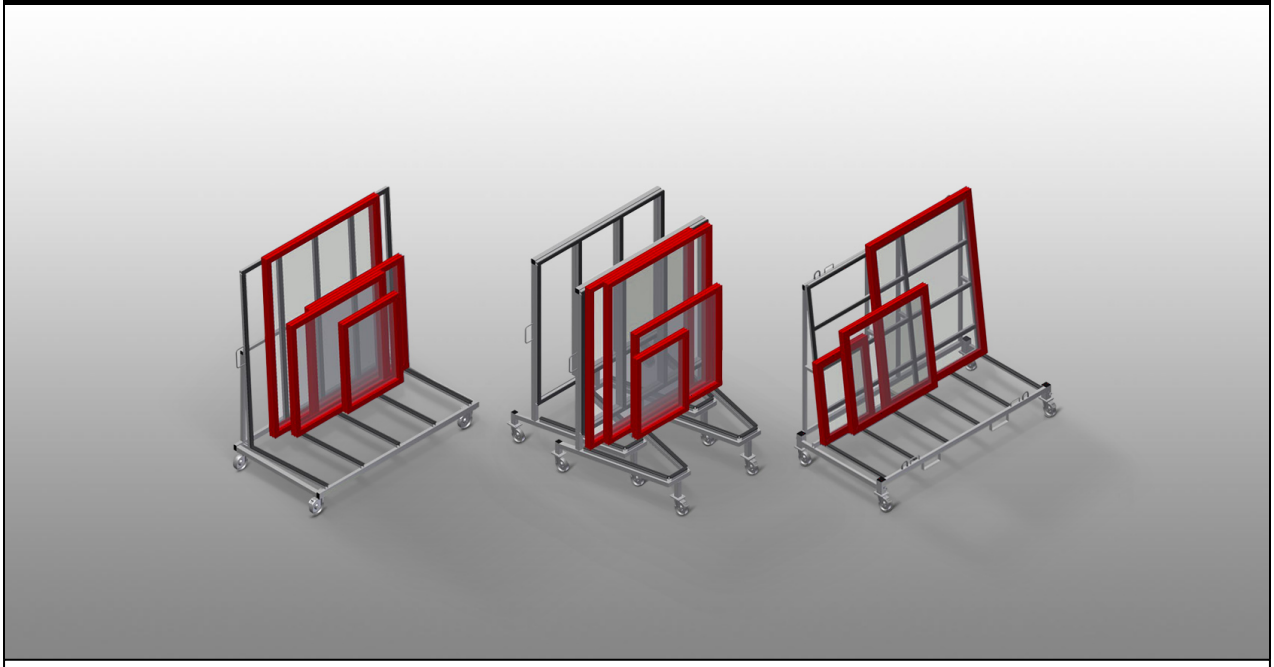

Commissioning trolley for in-house transportation of window elements. Stable steel construction. Profile supports with rubber surface. Four swivel castors, two of which with locking stop.
KW 2: Openings for forklift transportation. Four hooks for crane transportation. Four lashing strap attachment points. Castors can be removed for increased stability of the commissioning trolley in a lorry.
KW 3: Can be nested when not loaded – a space-saving feature.
KW 4: Openings for forklift transportation. Four hooks for crane transportation. Four lashing strap attachment points. Castors can be removed for increased stability of the commissioning trolley.

elumatec AG
Pinacher Straße, 61
75417 Mühlacker
Germany

Tel +49 7041-14-184
sales@elumatec.com
www.elumatec.com

The right to make technical alterations is reserved.

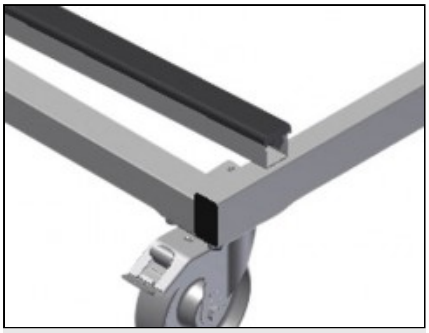

Casters KW 1 / KW 3

Four casters, two of which have a fixing brake, provide a high degree of mobility and easy, safe handling

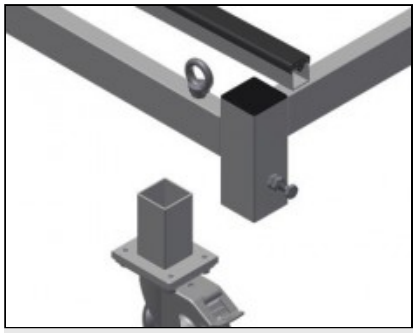

Removable casters KW 2

Casters can be removed for increased stability of the commissioning trolley in a lorry. Four casters, two of which have a fixing brake, provide a high degree of mobility and easy, safe handling

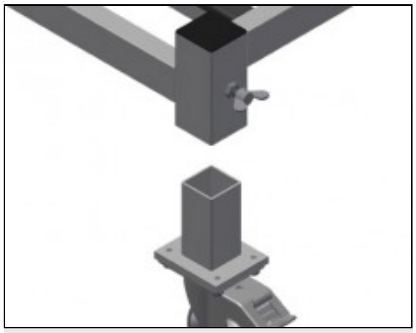

Removable casters KW 4

Casters can be removed for increased stability of the commissioning trolley on the floor. Four casters, two of which have a fixing brake, provide a high degree of mobility and easy, safe handling

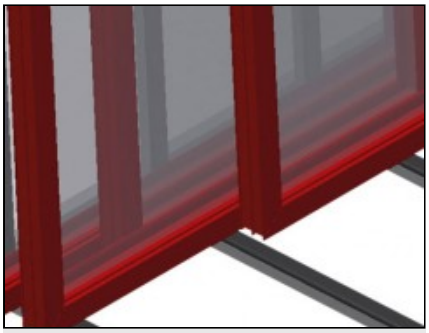

Supports with rubber strip

Supporting surfaces equipped with rubber strips to protect profiles from damage

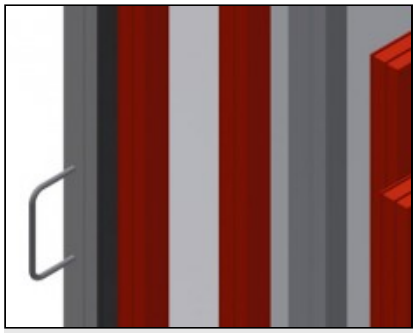

Transport handles KW 1 / KW 3

Transport handle on both sides for mobility

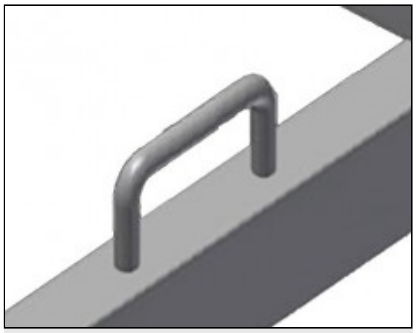

Lashing strap attachment points KW 2 / KW 4

With four lashing strap attachment points

elumatec AG
Pinacher Straße, 61
75417 Mühlacker
Germany

Tel +49 7041-14-184
sales@elumatec.com
www.elumatec.com

The right to make technical alterations is reserved.



Crane attachment points KW 2 / KW 4

Equipped with four crane attachment points

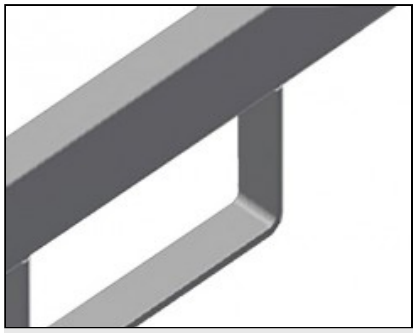

Forklift openings KW 2 / KW 4

Equipped with four forklift openings

elumatec AG
Pinacher Straße, 61
75417 Mühlacker
Germany

Tel +49 7041-14-184
sales@elumatec.com
www.elumatec.com

The right to make technical alterations is reserved.

KW / TROLLEYS

MODELS

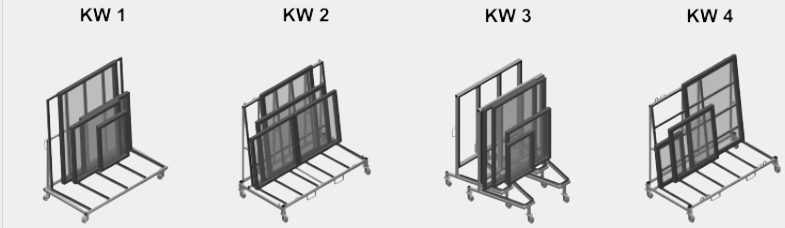

DIMENSION AND WEIGHT

KW 1 / KW 2 / KW 3 / KW 4	
Length (mm)	1.690 / 2.025 / 1.600 / 2.000
Width (mm)	910 / 1.090 / 1.130 / 1.000
Height (mm)	1.768 / 1.880 / 1.960 / 1.850
Weight (kg)	100 / 130 / 90 / 150

STORAGE CAPACITY

KW 1 / KW2 / KW 3 / KW 4	
Load capacity (kg)	400 / 600 / 400 / 500
KW 2	
Effective width (mm)	800
Support height (mm)	1.500

elumatec AG
Pinacher Straße, 61
75417 Mühlacker
Germany

Tel +49 7041-14-184
sales@elumatec.com
www.elumatec.com

The right to make technical alterations is reserved.

CHARACTERISTICS

KW 2 / KW 4	
Openings for forklift transportation	●
Hooks for crane transportation	4
Lashing strap attachment points	4
KW 2	
Trolley also for external transportation	●
Castors can be removed for commissioning trolley in a lorry	●
KW 3	
Horizontally stackable when not loaded	●
KW 4	
Lifting station for the transfer of heavy windows	○
KW 1 / KW 2 / KW 3 / KW 4	
Swivel castors diameter (mm)	125
Swivel castors	4
Swivel castors with locking stop	2

Included ● Available ○

elumatec AG
Pinacher Straße, 61
75417 Mühlacker
Germany

Tel +49 7041-14-184
sales@elumatec.com
www.elumatec.com

The right to make technical alterations is reserved.