elumatec

a voilàp company

KT

ASSEMBLY TABLES

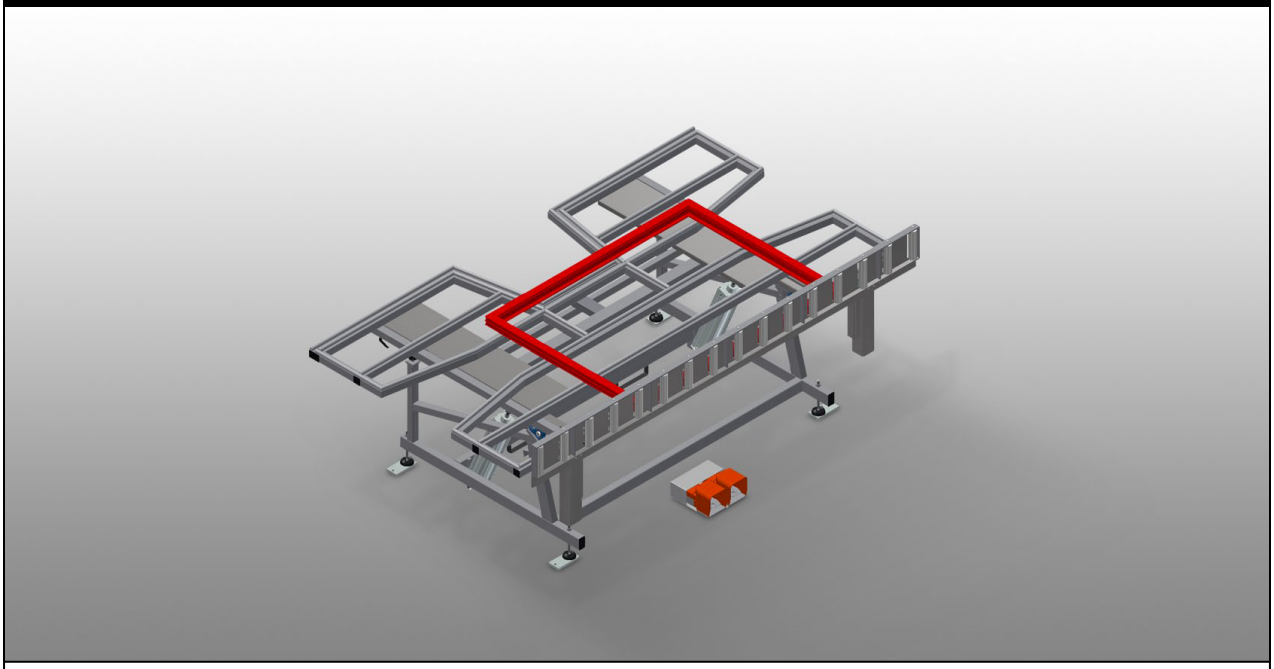

Assembly table for vertical and horizontal assembly. Stable steel construction. Important when switching from vertical to horizontal transportation and vice versa. Ideal for vertical and horizontal assembly. Pneumatic tilting. Table supporting surface with plastic slide bars. Roller support can be lowered pneumatically. 4-fold compressed air supply.

elumatec AG
Pinacher Straße, 61
75417 Mühlacker
Germany

Tel +49 7041-14-184
sales@elumatec.com
www.elumatec.com

The right to make technical alterations is reserved.

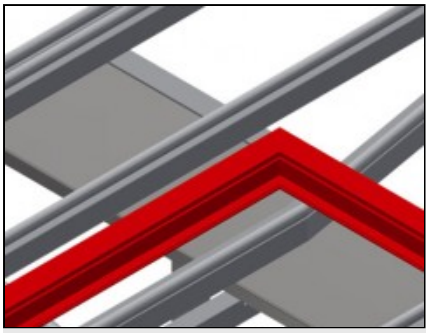

Supporting surfaces

Supporting surfaces with plastic slide bars

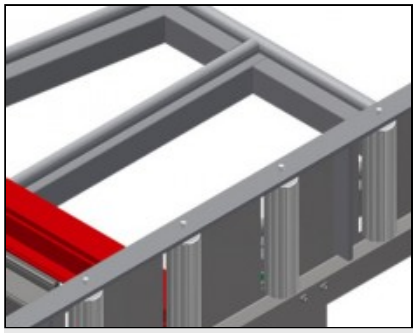

Roller support

Roller conveyor can be lowered pneumatically to allow unhindered working in horizontal position; in vertical position, trouble-free onward transport is possible

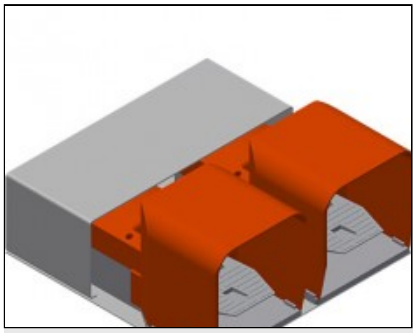

Foot switch

Control via foot valve, Pneumatic horizontal/vertical tilting

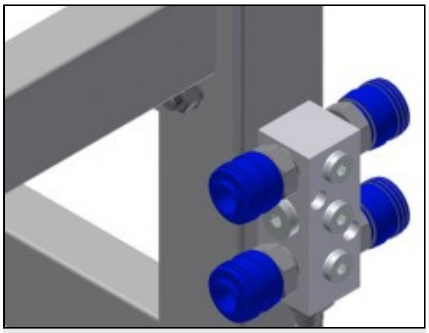

4-fold compressed air connection

4-fold compressed air connection for connecting compressed-air tools

elumatec AG
Pinacher Straße, 61
75417 Mühlacker
Germany

Tel +49 7041-14-184
sales@elumatec.com
www.elumatec.com

The right to make technical alterations is reserved.

KT / ASSEMBLY TABLES

MODELS

KT 3000



KT 4000



DIMENSION AND WEIGHT

KT 3000 / KT 4000

Length (mm)	3.000 / 4.000
Width (mm)	1.820
Vertical height (mm)	1.900
Roller conveyor width (mm)	200
Weight (kg)	330 / 380

SUPPORTING SURFACE

Pneumatic height adjustment (mm)	500
Pneumatic tilting	●
Extendable table support	○
Table brush strip supporting surface	○
Table felt profile strip supporting surface	○
Table rubber knob profile	○
Profile protectors for support rollers	○
Load capacity (kg)	200

CHARACTERISTICS

4-fold compressed air supply	●
Mobility unit	○
Rail 2,0 m left and right	○
Operating air pressure (bar)	7
Air consumption approx. (l/min)	35

Included ● Available ○

elumatec AG
Pinacher Straße, 61
75417 Mühlacker
Germany

Tel +49 7041-14-184
sales@elumatec.com
www.elumatec.com

The right to make technical alterations is reserved.