HD

ASSEMBLY TABLES

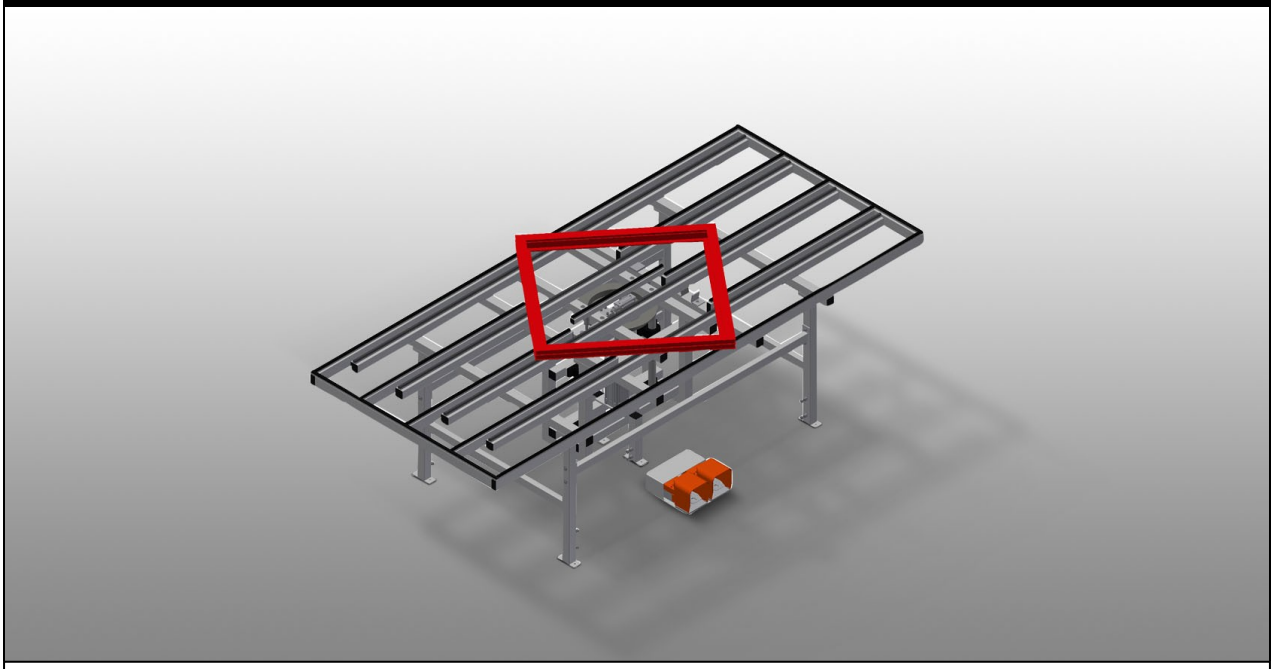

Lift and turn table for assembly and gasket insertion. Stable steel construction. Ideal for assembly and gasket insertion. Adjustable height. Inner table height pneumatically adjustable. Inner table can be rotated; with pneumatic fixing brake. Inner table equipped with rubber strips. Outer table with plastic slide bars. 4-fold compressed air supply.

elumatec AG
Pinacher Straße, 61
75417 Mühlacker
Germany

Tel +49 7041-14-184
sales@elumatec.com
www.elumatec.com

The right to make technical alterations is reserved.

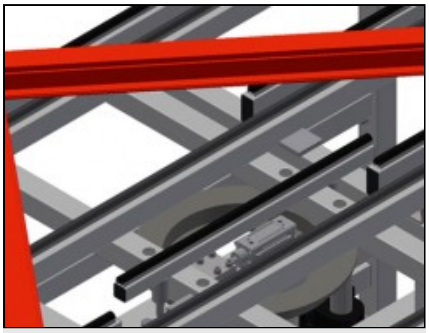

Lift and turn mechanism

Practical for hardware assembly as well as for final assembly and gasket insertion. Inner table height pneumatically adjustable. Inner table can be rotated; with pneumatic fixing brake

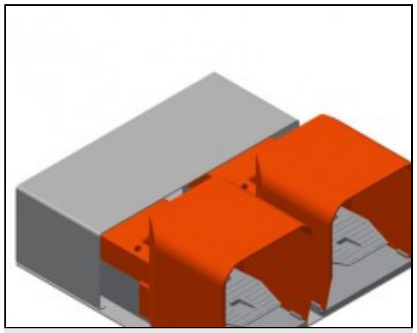

Foot switch

Control via foot valve

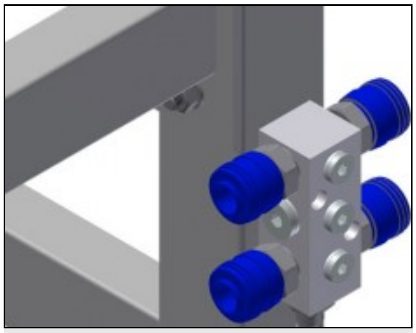

4-fold compressed air connection

4-fold compressed air connection for connecting compressed-air tools

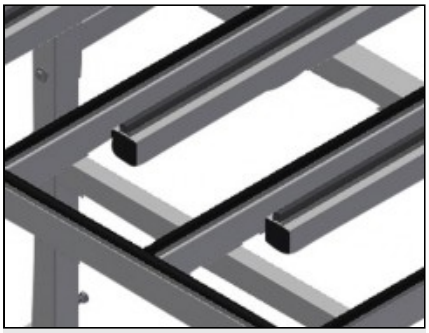

Supporting surfaces

Outer table with plastic slide bars. Inner table equipped with rubber strips.

elumatec AG
Pinacher Straße, 61
75417 Mühlacker
Germany

Tel +49 7041-14-184
sales@elumatec.com
www.elumatec.com

The right to make technical alterations is reserved.

HD / ASSEMBLY TABLES

MODELS

HD 3000

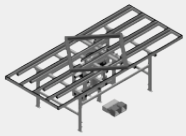

DIMENSION AND WEIGHT

Length (mm)	3.000
Width (mm)	1.300
Weight (kg)	240

SUPPORTING SURFACE

Adjustable height (mm)	850 ÷ 1000
Travel of pneumatic inner table (mm)	150
Load capacity (kg)	200
Outer table surface with rubber strips	○

CHARACTERISTICS

Operating air pressure (bar)	7
Air consumption approx. (l/min)	35

Included ● Available ○

elumatec AG
Pinacher Straße, 61
75417 Mühlacker
Germany

Tel +49 7041-14-184
sales@elumatec.com
www.elumatec.com

The right to make technical alterations is reserved.