GLR

RACK SYSTEMS

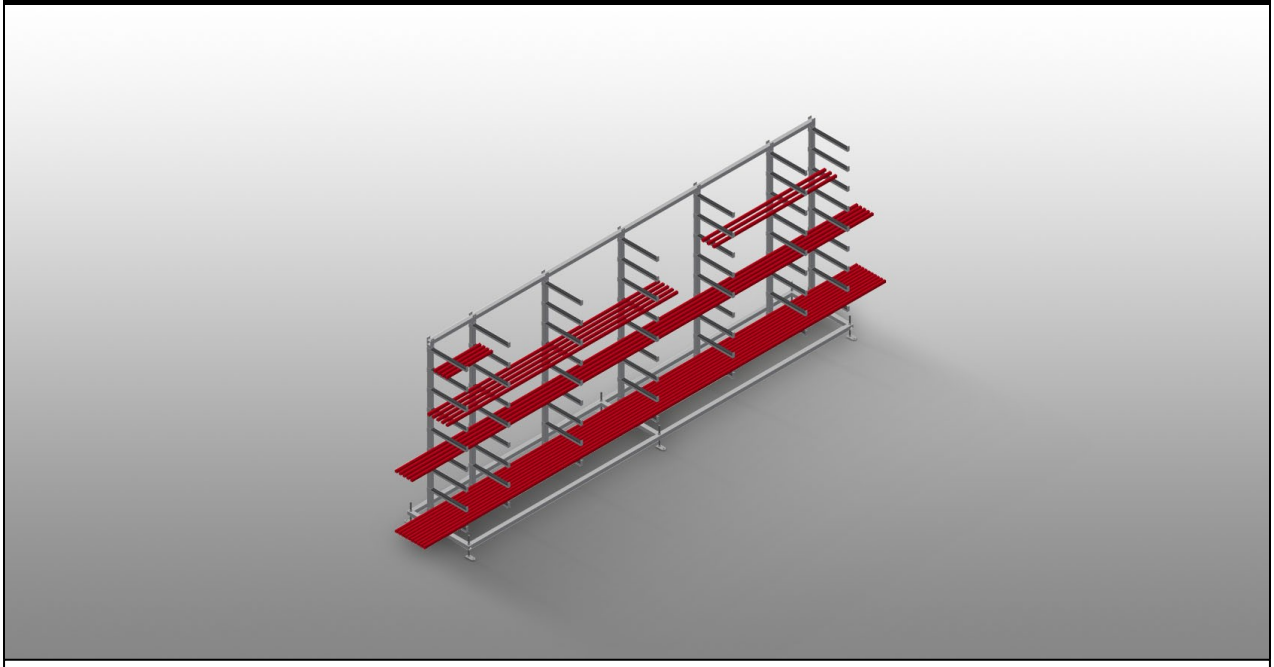

Stable steel construction. Glazing bead rack for horizontal storage of aluminium and plastic glazing beads. Ideal for storing and sorting glazing beads, e.g. before the glazing bead saw. Seven support arms are evenly spaced along the rack. Four centre supports are adjustable. Nine support arms are freely adjustable, giving variable support arm spacing. Support arms are rubber coated. Well-organised storage provides quick access.

elumatec AG
Pinacher Straße, 61
75417 Mühlacker
Germany

Tel +49 7041-14-184
sales@elumatec.com
www.elumatec.com

The right to make technical alterations is reserved.

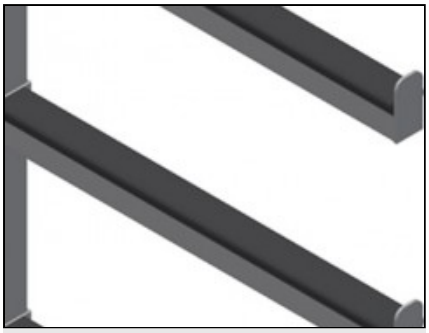

Support arms

Support arms are rubber coated. Centre upright is adjustable. Support arms are freely adjustable, giving variable support arm spacing

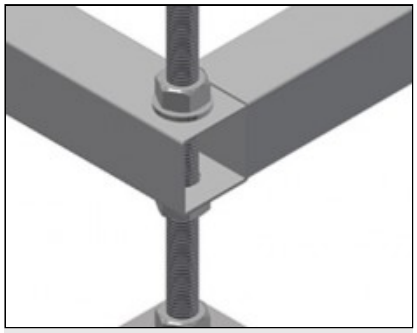

Hinged foot

Working height can be adjusted by means of adjustable feet

elumatec AG
Pinacher Straße, 61
75417 Mühlacker
Germany

Tel +49 7041-14-184
sales@elumatec.com
www.elumatec.com

The right to make technical alterations is reserved.

GLR / RACK SYSTEMS

MODELS

GLR 5000

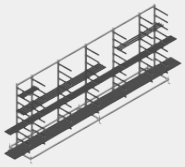

DIMENSION AND WEIGHT

Length (mm)	5.000
Width (mm)	800
Height (mm)	2.200
Weight (kg)	200

STORAGE CAPACITY

Shelves	9
Centre supports adjustable	4
Compartment depth (mm)	450
Clearance (mm)	185
Load capacity (kg)	630

Included ● Available ○

elumatec AG
Pinacher Straße, 61
75417 Mühlacker
Germany

Tel +49 7041-14-184
sales@elumatec.com
www.elumatec.com

The right to make technical alterations is reserved.