GFW

TROLLEYS



Glass transport trolley ideal for sorting glass and for in-house transportation of sheets of glass. Stable steel construction.
GFW 1200: Hardwood supporting surface with felt. Compartment dividers for 20 sheets of glass. Compartment dividers height is adjustable. Four swivel castors, two of which with locking stop.
GFW 15: Compartment dividers for 15 sheets of glass. Access is possible from both sides. The glass supporting surface has a rubber profile. Compartment divider with plastic protector. Transport handle on both sides for mobility. Two swivel castors and two fixed rollers.

elumatec AG
Pinacher Straße, 61
75417 Mühlacker
Germany

Tel +49 7041-14-184
sales@elumatec.com
www.elumatec.com

The right to make technical alterations is reserved.

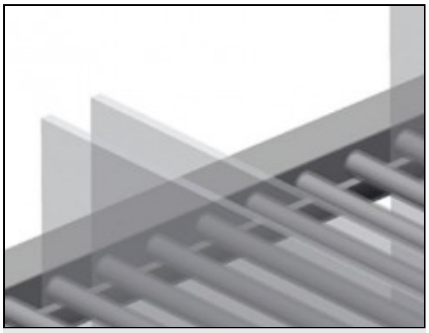

Compartment divider with plastic protection GFW 1200

Compartment dividers height is adjustable. All supporting surfaces have a non-slip PVC cladding which protects sheets of glass from damage during storage

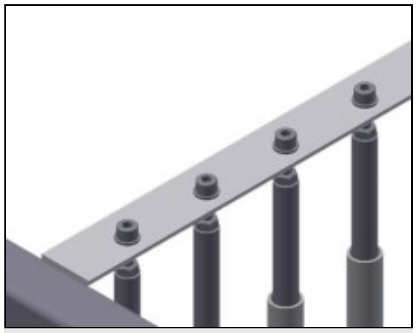

Compartment divider with plastic protector GFW 15

All supporting surfaces have a non-slip PVC cladding which protects the sheets of glass from damage during storage

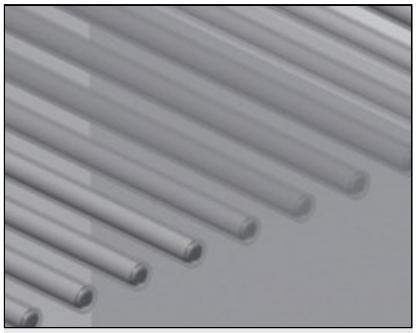

Easy loading and unloading GFW 1200

Well-organised storage provides quick access

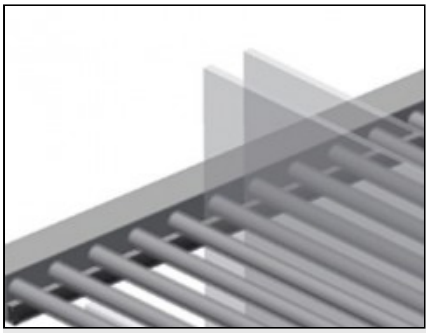

Rear support with rubber strips GFW 1200

Rear supporting surfaces equipped with rubber strips protect sheets of glass from damage

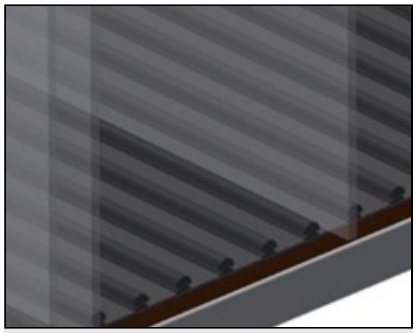

Wooden supporting surface with felt GFW 1200

Lower supporting surface covered with felt.Additional plastic strips on the floor



Supports GFW 15

Lower supporting surfaces equipped with rubber profile to protect the sheets of glass from damage

elumatec AG
Pinacher Straße, 61
75417 Mühlacker
Germany

Tel +49 7041-14-184
sales@elumatec.com
www.elumatec.com

The right to make technical alterations is reserved.

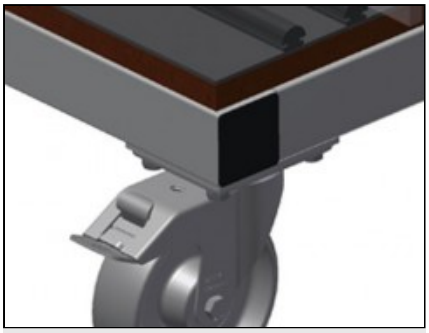

Castors GFW 1200

Four casters, two of which have a fixing brake, provide a high degree of mobility and easy, safe handling

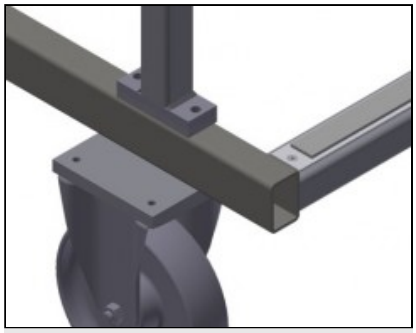

Castors, cmpl. GFW 15

Two castors and two fixed rollers provide mobility in all directions. Roller diameter 200 mm

elumatec AG
Pinacher Straße, 61
75417 Mühlacker
Germany

Tel +49 7041-14-184
sales@elumatec.com
www.elumatec.com

The right to make technical alterations is reserved.

GFW / TROLLEYS

MODELS

GFW 1200



GFW 15

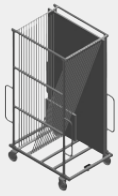

DIMENSION AND WEIGHT

GFW 1200 / GFW 15	
Length (mm)	1.200 / 1.810
Width (mm)	1.400 / 1.300
Height (mm)	2.270 / 3.020
Weight (kg)	210 / 255

STORAGE CAPACITY

GFW 1200 / GFW 15	
Compartments	20 / 15
Load capacity (kg)	800 / 750
GFW 1200	
Clearance (mm)	30
GFW 15	
Compartment width (mm)	44
Compartment height (mm)	2.600

CHARACTERISTICS

GFW 1200 / GFW 15	
Swivel castors diameter (mm)	120 / 200
GFW 1200	
Swivel castors	4
Swivel castors with locking stop	2

Included ● Available ○

elumatec AG
Pinacher Straße, 61
75417 Mühlacker
Germany

Tel +49 7041-14-184
sales@elumatec.com
www.elumatec.com

The right to make technical alterations is reserved.