GF

TROLLEYS

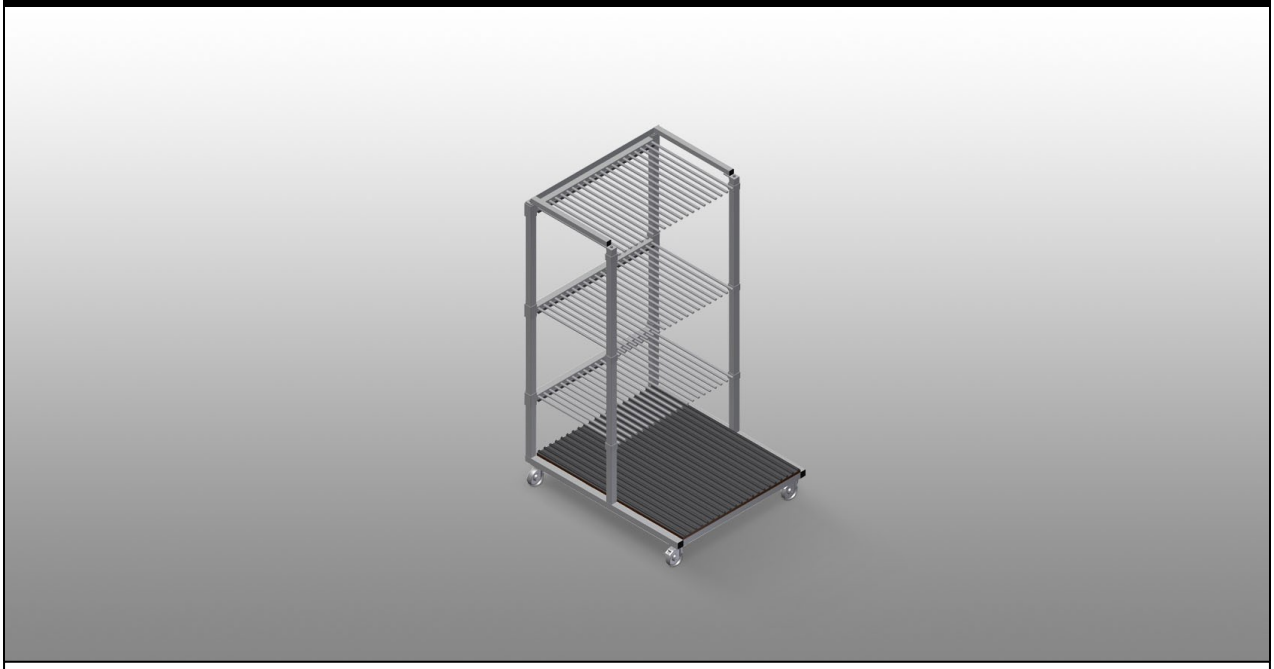

Glass transport trolley with sorting rack. Stable steel construction. Ideal for sorting glass. Hardwood supporting surface with felt. Compartment dividers for 20 sheets of glass. Compartment dividers height is adjustable. Four swivel castors, two of which with locking stop.

elumatec AG
Pinacher Straße, 61
75417 Mühlacker
Germany

Tel +49 7041-14-184
sales@elumatec.com
www.elumatec.com

The right to make technical alterations is reserved.

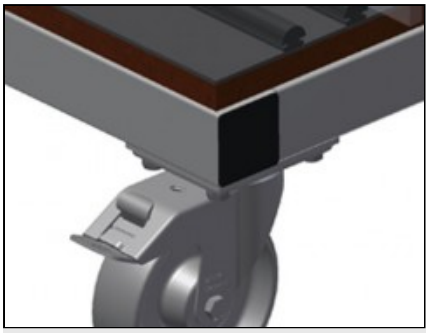

Castors

Four casters, two of which have a fixing brake, provide a high degree of mobility and easy, safe handling

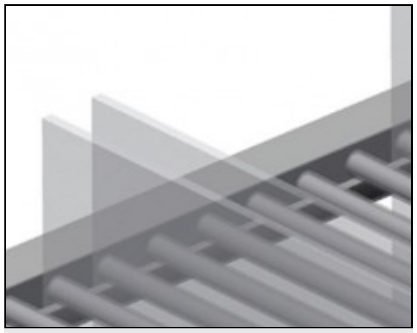

Compartment divider with plastic protection

Compartment dividers height is adjustable. All supporting surfaces have a non-slip PVC cladding which protects sheets of glass from damage during storage

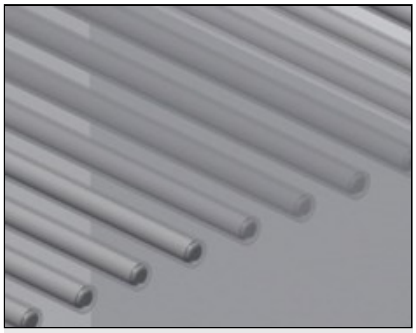

Easy loading and unloading

Well-organised storage provides quick access

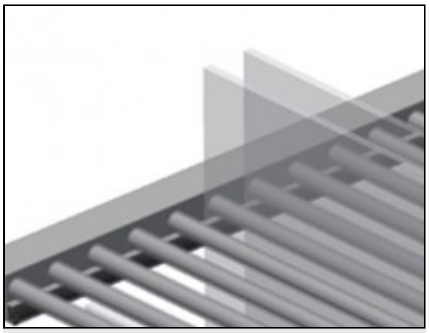

Rear support with rubber strips

Rear supporting surfaces equipped with rubber strips protect sheets of glass from damage

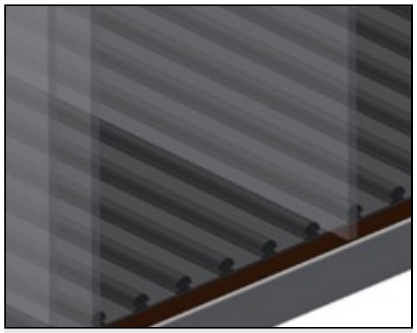

Wooden supporting surface with felt

Lower supporting surface covered with felt.Additional plastic strips on the floor

elumatec AG
Pinacher Straße, 61
75417 Mühlacker
Germany

Tel +49 7041-14-184
sales@elumatec.com
www.elumatec.com

The right to make technical alterations is reserved.

GF / TROLLEYS

MODELS

GF 1000



DIMENSION AND WEIGHT

Length (mm)	1.180
Width (mm)	850
Height (mm)	1.360
Weight (kg)	95

STORAGE CAPACITY

Compartments	20
Clearance (mm)	30
Load capacity (kg)	400

CHARACTERISTICS

Swivel castors	4
Swivel castors with locking stop	2
Swivel castors diameter (mm)	125

Included ● Available ○

elumatec AG
Pinacher Straße, 61
75417 Mühlacker
Germany

Tel +49 7041-14-184
sales@elumatec.com
www.elumatec.com

The right to make technical alterations is reserved.