G

GLASS MANIPULATORS



Equipment holder for compressed-air and electric equipment. Attach to the wall or a steel column. Moveable storage device for tools and compressed-air equipment for improved working conditions. No air hoses on the floor. Tool rack with height adjustment. Supplied with two spiral hoses as standard (without tools). With maintenance unit and air connection hose. Double two-pin grounded socket. 4-fold compressed air supply.

elumatec AG
Pinacher Straße, 61
75417 Mühlacker
Germany

Tel +49 7041-14-184
sales@elumatec.com
www.elumatec.com

The right to make technical alterations is reserved.

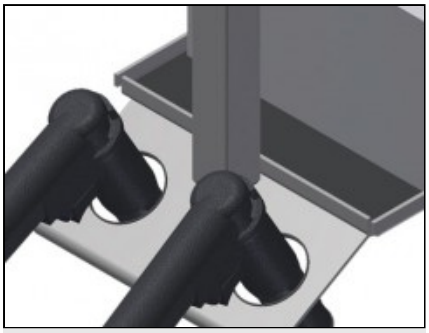

Tool rack

Tool rack for pneumatic or electrical tools

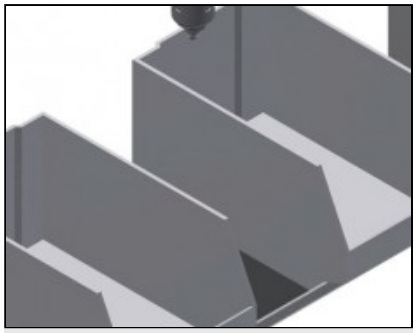

Storage area

Practical storage area with two plastic trays for small accessories such as hardware and screws

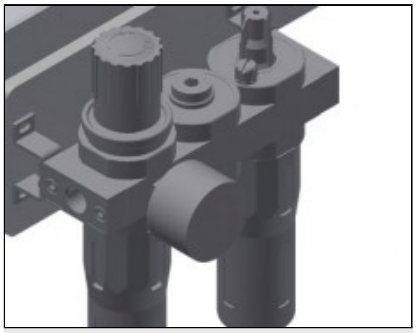

Maintenance unit

Maintenance unit for compressed-air tools

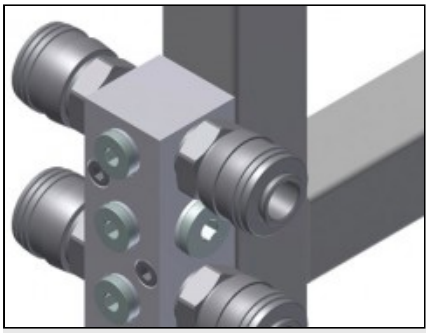

4-fold compressed air connection

4-fold connection for compressed-air tools



Double two-pin grounded socket

elumatec AG
Pinacher Straße, 61
75417 Mühlacker
Germany

Tel +49 7041-14-184
sales@elumatec.com
www.elumatec.com

The right to make technical alterations is reserved.

G / GLASS MANIPULATORS

MODELS

G 3000



G 4000



CHARACTERISTICS

G 3000 / G 4000

Arm length (mm)	3.000 / 4.000
Load capacity (kg)	160 / 120
Spiral hoses as standard (without tools)	2
Maintenance unit and air connection hose	●
4-fold compressed air supply	●
Double two-pin grounded socket	○
Steel holder for fastening to the floor	○

Included ● Available ○

elumatec AG
Pinacher Straße, 61
75417 Mühlacker
Germany

Tel +49 7041-14-184
sales@elumatec.com
www.elumatec.com

The right to make technical alterations is reserved.