elumatec

a voilàp company

DG 142 XL

DOUBLE MITRE-SAWS



- External-dimension cuts possible for all cutting variants
- Ideal machine for high-volume series production when cutting at 90° and 45°
- Equipped with saw blades and safety hoods as standard
- Equipped with E 190 digital display and handwheel adjustment as standard
- Vertical pneumatic material clamping unit

Cutting length variants

- 3,000 mm
- 4,500 mm
- 6,000 mm
- 7,500 mm
- Additional lengths on request!

Options

- Manual angle adjustment for each unit, digital
- Additional software for E 590: optimisation program, software module for chop and oversize length cuts for E 590 and E 390 as standard
- Label printer for variants with E 390 and E 590
- Mobile workpiece support
- Material clamping units
- Transom stop and lead-cut stop
- Extraction system
- Stationary and/or travelling roller conveyor

elumatec AG
Pinacher Straße, 61
75417 Mühlacker
Germany

Tel +49 7041-14-184
sales@elumatec.com
www.elumatec.com

The right to make technical alterations is reserved.

- Saw blades
- 5.5 kW motors for aluminium machining
- Hydro feed for aluminium machining
- High performance cutting fluid for aluminium machining
- Pulsed coolant system for aluminium machining
- Cycling
- Safety fence

Controller variants

- Manual cutting length adjustment with E 190 digital display
- Positioning control E 390
- PC control E 590

elumatec AG
Pinacher Straße, 61
75417 Mühlacker
Germany

Tel +49 7041-14-184
sales@elumatec.com
www.elumatec.com

The right to make technical alterations is reserved.



02. Double mitre saw DG 142 XL



03. Double mitre saw DG 142 XL

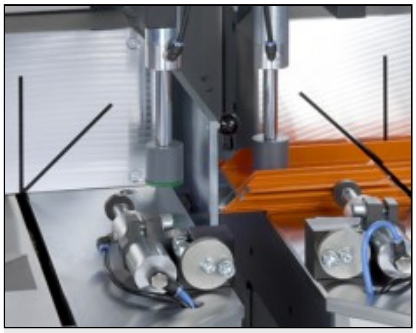

04. Double mitre saw DG 142 XL

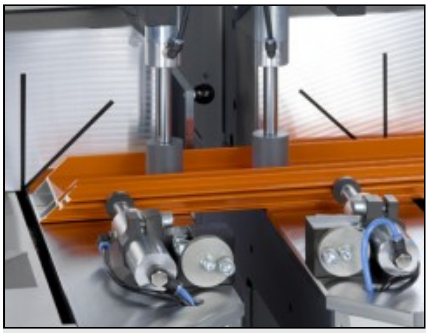

05. Double mitre saw DG 142 XL

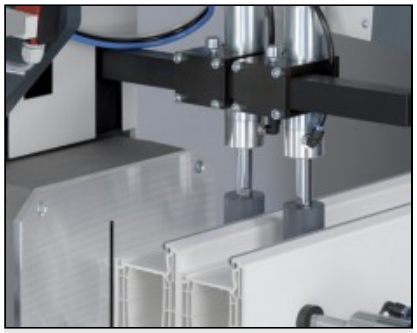

06. Double mitre saw DG 142 XL

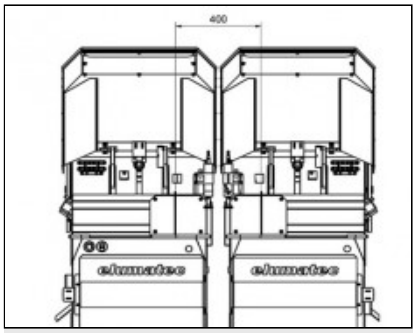

07. Double mitre saw DG 142 XL

Minimum dimension for 90° cut: 400 mm

elumatec AG
Pinacher Straße, 61
75417 Mühlacker
Germany

Tel +49 7041-14-184
sales@elumatec.com
www.elumatec.com

The right to make technical alterations is reserved.

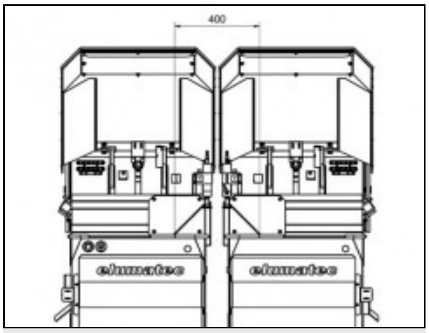

08. Double mitre saw DG 142 XL

Minimum dimension for 45° cut: 400 mm

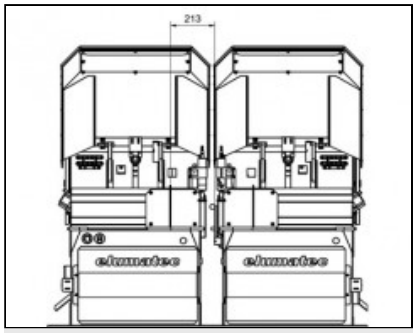

09. Double mitre saw DG 142 XL

Minimum dimension for 90° cut with short stop on the travelling unit: 213 mm

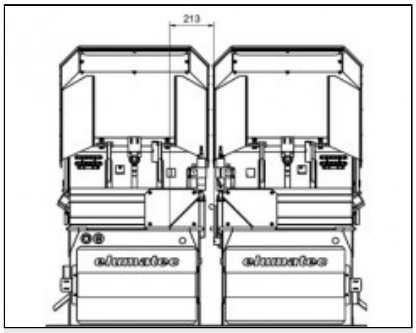

10. Double mitre saw DG 142 XL

Minimum dimension for 45° cut with short stop on the travelling unit: 213 mm

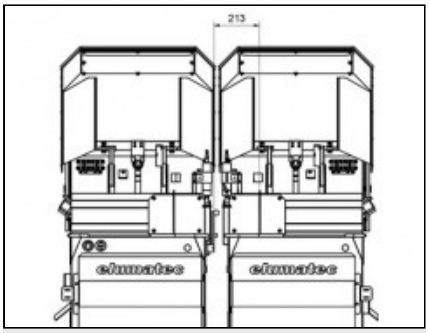

11. Double mitre saw DG 142 XL

Minimum dimension for 90° cut with short stop on the stationary unit: 213 mm

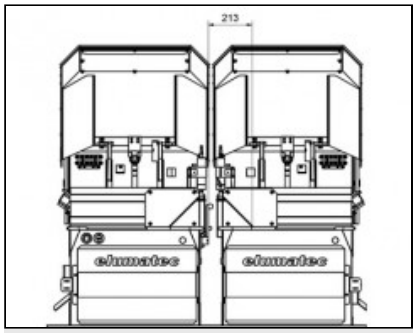

12. Double mitre saw DG 142 XL

Minimum dimension for 45° cut with short stop on the stationary unit: 213 mm

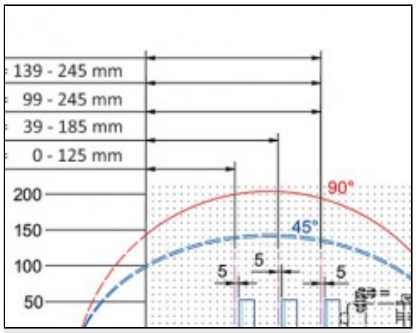

13. Cutting diagram DG 142 XL

Pneumatic clamping device horizontal travel = 80 Z = clamping range

elumatec AG
Pinacher Straße, 61
75417 Mühlacker
Germany

Tel +49 7041-14-184
sales@elumatec.com
www.elumatec.com

The right to make technical alterations is reserved.

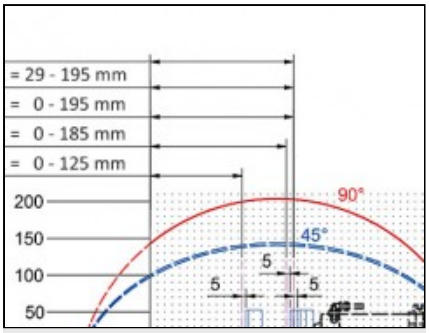

14. Cutting diagram DG 142 XL

Pneumatic clamping device horizontal
travel = 140 Z = clamping range

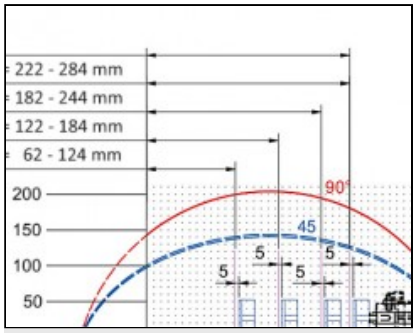

15. Cutting diagram DG 142 XL

Pneumatic clamping device horizontal
travel = 40 Z = clamping range

elumatec AG
Pinacher Straße, 61
75417 Mühlacker
Germany

Tel +49 7041-14-184
sales@elumatec.com
www.elumatec.com

The right to make technical alterations is reserved.