BW

TROLLEYS

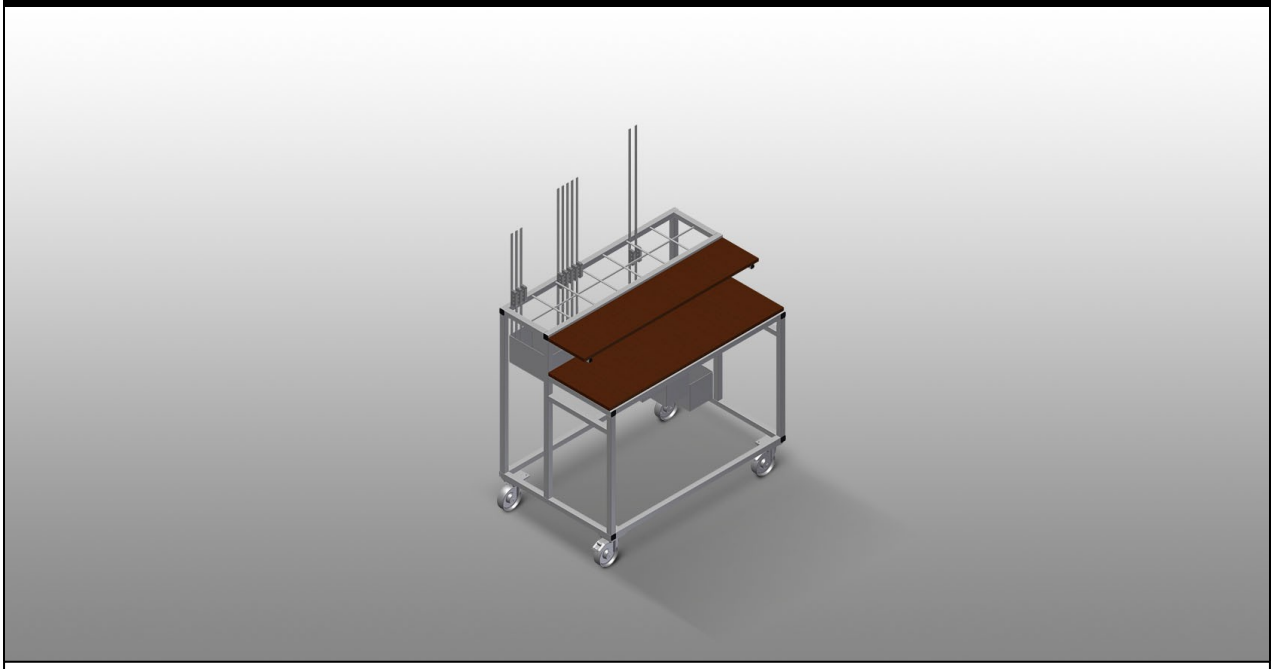

Hardware trolley for providing an organised arrangement of hardware. Stable steel construction. Two wooden shelves. Equipped for the mounting of a punch press. Four swivel castors, two of which with locking stop.

elumatec AG
Pinacher Straße, 61
75417 Mühlacker
Germany

Tel +49 7041-14-184
sales@elumatec.com
www.elumatec.com

The right to make technical alterations is reserved.

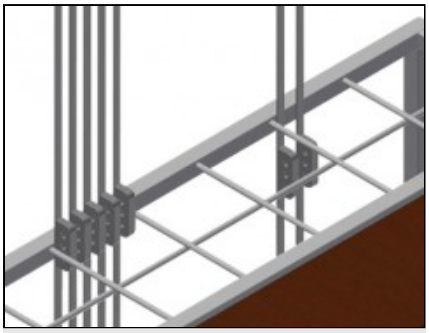

Compartments

Four casters, two of which have a fixing brake, provide a high degree of mobility and easy, safe handling

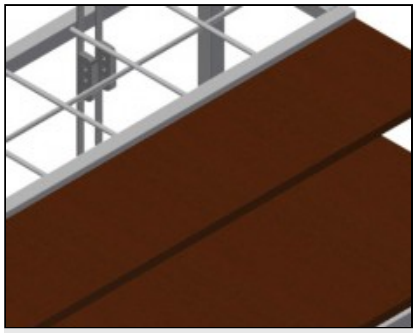

Storage area

Two storage areas for tools and accessories

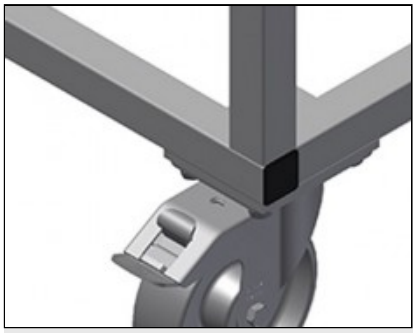

Casters

Four casters, two of which have a fixing brake, provide a high degree of mobility and easy, safe handling

elumatec AG
Pinacher Straße, 61
75417 Mühlacker
Germany

Tel +49 7041-14-184
sales@elumatec.com
www.elumatec.com

The right to make technical alterations is reserved.

BW / TROLLEYS

MODELS

BW 7002



DIMENSION AND WEIGHT

Length (mm)	1.100
Width (mm)	710
Height (mm)	1.090
Weight (kg)	50

STORAGE CAPACITY

Compartments	7
Wooden shelves	2
Load capacity (kg)	300

CHARACTERISTICS

Swivel castors	4
Swivel castors with locking stop	2
Swivel castors diameter (mm)	125

Included ● Available ○

elumatec AG
Pinacher Straße, 61
75417 Mühlacker
Germany

Tel +49 7041-14-184
sales@elumatec.com
www.elumatec.com

The right to make technical alterations is reserved.