AW

TROLLEYS

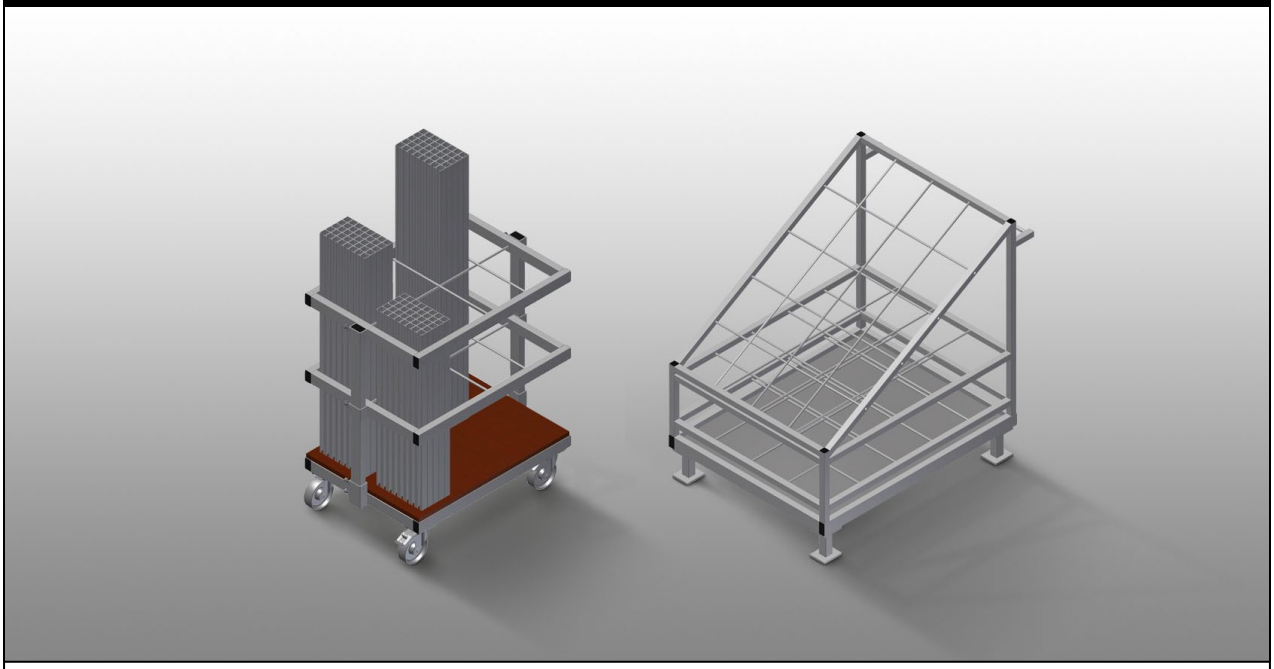

Trolley for transporting and providing a sorted selection of cut-to-length reinforcement profiles. Stable steel construction. Vertical storage and transportation of steel profiles. Compact outside dimensions. Well-organised arrangement of fixed-length profiles.
AW 800: Four swivel castors, two of which with locking stop.
AW 1100: Transportable with forklift truck.

elumatec AG
Pinacher Straße, 61
75417 Mühlacker
Germany

Tel +49 7041-14-184
sales@elumatec.com
www.elumatec.com

The right to make technical alterations is reserved.

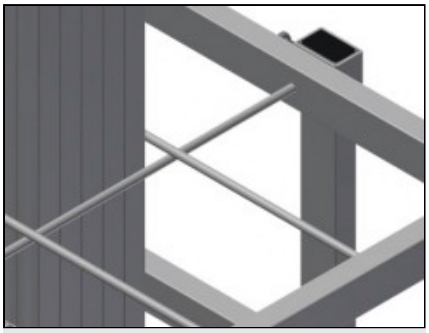

Compartments AW 800

Six compartments, compartment size 190 x 265 mm

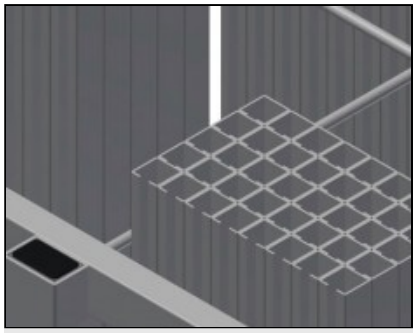

Grid frame AW 800

Two grid frames with height adjustment

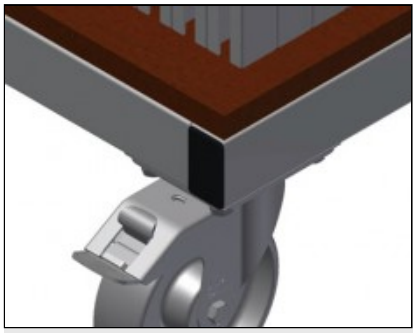

Casters AW 800

Four casters, two of which have a fixing brake, provide a high degree of mobility and easy, safe handling

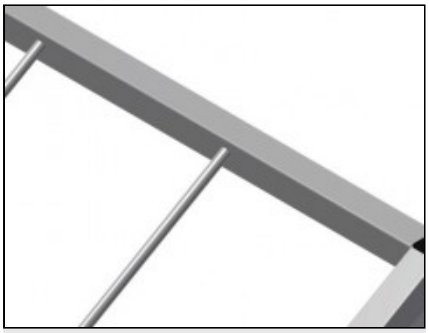

Compartments AW 1100

20 compartments, 200 x 200 mm

elumatec AG
Pinacher Straße, 61
75417 Mühlacker
Germany

Tel +49 7041-14-184
sales@elumatec.com
www.elumatec.com

The right to make technical alterations is reserved.

AW / TROLLEYS

MODELS

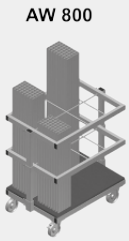



DIMENSION AND WEIGHT

AW 800 / AW 1100	
Length (mm)	800 / 1.100
Width (mm)	600 / 900
Height (mm)	960 / 1.100
Weight (kg)	35 / 80

STORAGE CAPACITY

AW 800 / AW 1100	
Compartments	6 / 20
Load capacity (kg)	400 / 600

CHARACTERISTICS

AW 800	
Swivel castors	4
Swivel castors with locking stop	2
Swivel castors diameter (mm)	125
AW 1100	
Mobile as trolley (Two swivel casters with locking stop and two fixed casters - Castors diameter 125 mm)	○

Included ● Available ○

elumatec AG
Pinacher Straße, 61
75417 Mühlacker
Germany

Tel +49 7041-14-184
sales@elumatec.com
www.elumatec.com

The right to make technical alterations is reserved.