# PWW

TROLLEYS

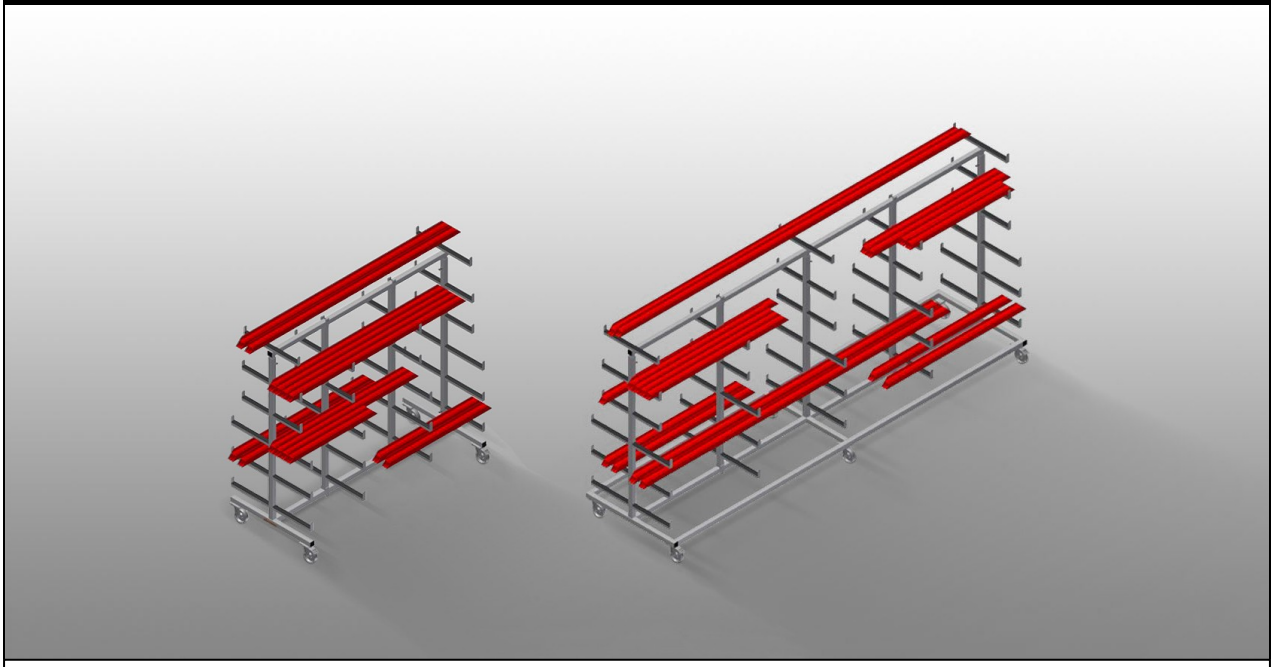

Profile trolley for horizontal storage and transportation of profiles. Stable steel construction. Horizontal profile transportation. Easy transportation of profile raw materials and cut-to-size profiles. Support arms are rubber coated. Profile trolley with profile supports on both sides. Six supports per upright.
PWW 1000: One centre upright. Four swivel castors, two of which with locking stop.
PWW 2000: Two centre uprights. Four swivel castors, two of which with locking stop.
PWW 4000: Three centre uprights. Six swivel castors, two of which with locking stop.

**elumatec AG**
Pinacher Straße, 61
75417 Mühlacker
Germany

Tel +49 7041-14-184
sales@elumatec.com
www.elumatec.com

The right to make technical alterations is reserved.

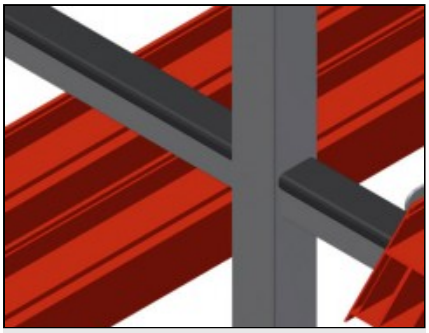

## Easy loading and unloading

Well-organised storage provides quick access

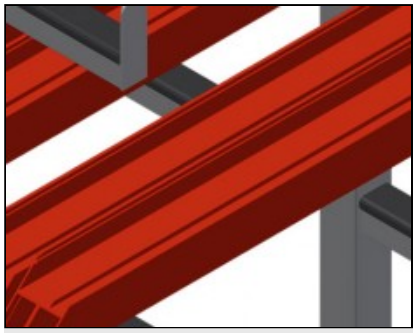

## Support arms

Support arms are rubber coated.Adjustable centre upright

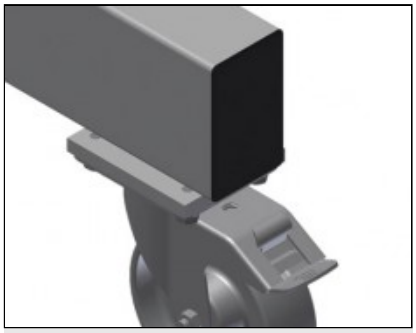

## Casters

Four casters, two of which have a fixing brake, provide a high degree of mobility and easy, safe handling

**elumatec AG**
Pinacher Straße, 61
75417 Mühlacker
Germany

Tel +49 7041-14-184
sales@elumatec.com
www.elumatec.com

The right to make technical alterations is reserved.

# **PWW** / TROLLEYS

## MODELS

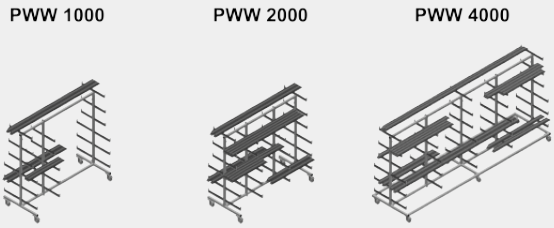


## DIMENSION AND WEIGHT

**PWW 1000 / PWW 2000 / PWW 4000**

| | |
|---|---|
| Length (mm) | 1.625 / 2.000 / 4.000 |
| Width (mm) | 900 / 900 / 1.000 |
| Height (mm) | 1.960 |
| Weight (kg) | 60 / 75 / 130 |

## STORAGE CAPACITY

**PWW 1000 / PWW 2000 / PWW 4000**

| | |
|---|---|
| Shelves | 11 |
| Clearance (mm) | 260 |
| Lower shelf width (mm) | 420 |
| Upper shelf width (mm) | 300 |
| Load capacity (kg) | 350 / 350 / 500 |

**elumatec AG**
Pinacher Straße, 61
75417 Mühlacker
Germany

Tel +49 7041-14-184
sales@elumatec.com
www.elumatec.com

The right to make technical alterations is reserved.

## CHARACTERISTICS

| PWW 1000 / PWW 2000 / PWW 4000 | |
|---|---|
| Centre upright | 1 / 2 / 3 |
| Swivel castors | 4 / 4 / 6 |
| Swivel castors with locking stop | 2 |
| Swivel castors diameter (mm) | 125 |
| **PWW 1000 / PWW 2000** | |
| Individual centre upright | ○ |

Included ● Available ○

**elumatec AG**
Pinacher Straße, 61
75417 Mühlacker
Germany

Tel +49 7041-14-184
sales@elumatec.com
www.elumatec.com

The right to make technical alterations is reserved.