elumatec

a voilàp company

# PWS

TROLLEYS

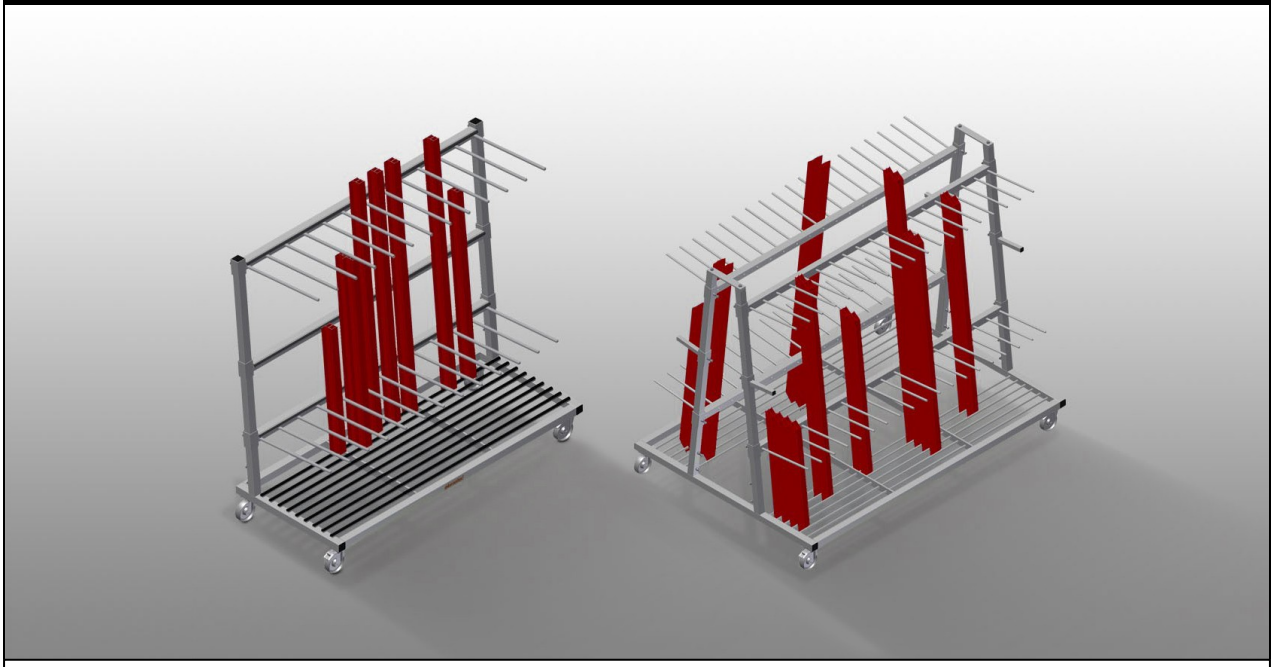

Profile trolley for vertical storage and transportation of aluminium profiles. Stable steel construction. Ideal for transportation and space-saving intermediate storage of cut-to-length profiles. Easy loading and unloading. Compartment divider height is adjustable. Four swivel castors, two of which with locking stop.
PWS 1000: Vertical profile transportation. Profile trolley with loading on one side. Sufficient for 30-40 profile bars. Supporting surface with bar grid floor.
PWS 1400: Vertical profile transportation. Sufficient for 30-40 profile bars. Lower supporting surface with rubber strips. Compartment dividers with protective tubing. Rear back support with rubber strips.
PWS 1800: Vertical profile transportation. Sufficient for 12-60 profile bars. Lower supporting surface with rubber strips. Compartment dividers with protective tubing. Rear back support with rubber strips.
PWS 2000: Vertical profile transportation. Profile trolley with loading on one side. Sufficient for 60-80 profile bars. Supporting surface with bar grid floor.
PWS 4000: Vertical profile transportation. Profile trolley can be loaded on both sides. 18 compartments per side. Sufficient for 120-160 profile bars. Supporting surface with bar grid floor.

**elumatec AG**
Pinacher Straße, 61
75417 Mühlacker
Germany

Tel +49 7041-14-184
sales@elumatec.com
www.elumatec.com

The right to make technical alterations is reserved.

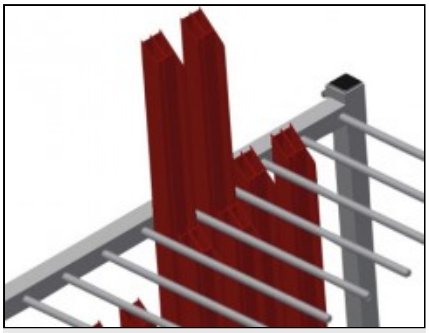

## Easy loading and unloading PWS 1000 / PWS 2000

Profile trolley with loading on one side

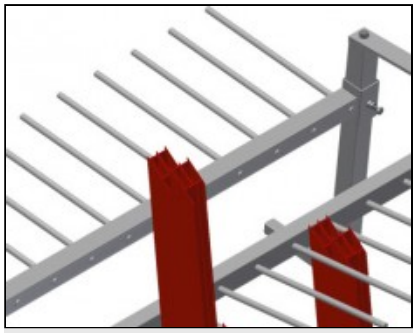

## Easy loading and unloading PWS 4000

Profile trolley with loading on two sides

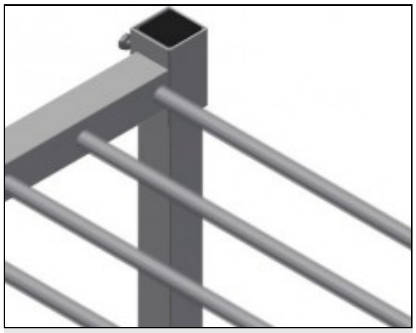

## Compartment dividers PWS 1000 / PWS 2000

Compartment divider height is adjustable, Compartment width 100 mm, Compartment depth 540 mm

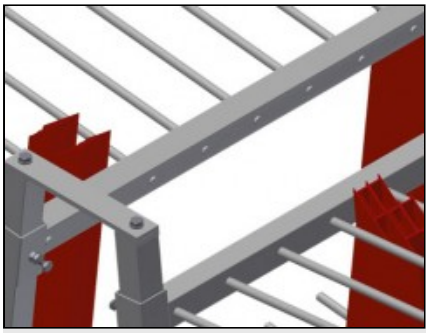

## Compartment dividers PWS 4000

Compartment divider height is adjustable, Compartment width 100 mm, Compartment depth 400 mm

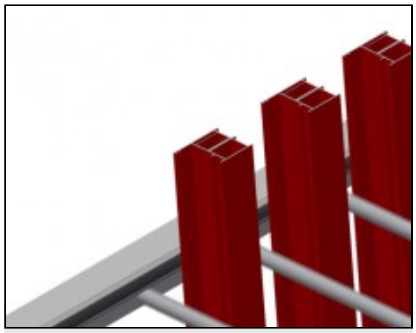

## Compartment divider with plastic protector PWS 1400 / PWS 1800

Compartment divider height is adjustable. All supporting surfaces have a non-slip PVC cladding which protects surfaces from damage during storage



## Supporting surface PWS 1000 / PWS 2000

Supporting surface with bar grid floor

**elumatec AG**
Pinacher Straße, 61
75417 Mühlacker
Germany

Tel +49 7041-14-184
sales@elumatec.com
www.elumatec.com

The right to make technical alterations is reserved.

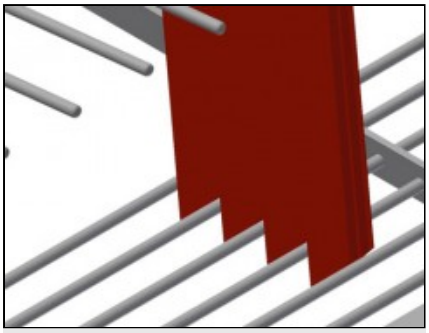

## Supporting surface PWS 4000

Supporting surface with bar grid floor

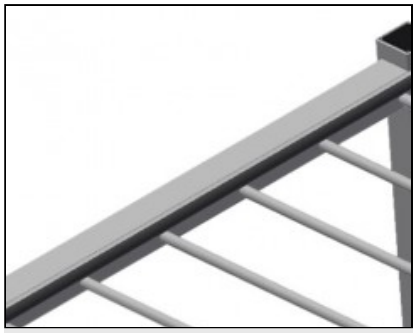

## Back support with rubber strips PWS 1400 / PWS 1800

Rear supporting surfaces equipped with rubber strips protect profiles from damage

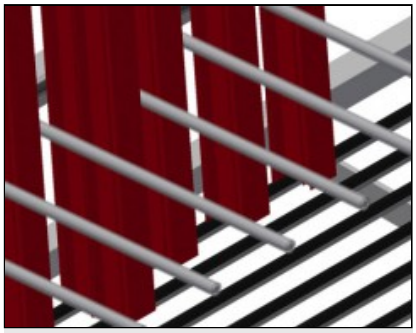

## Lower supporting surfaces with rubber strips PWS 1400 / PWS 1800

Lower supporting surfaces equipped with rubber strips to protect the profiles from damage

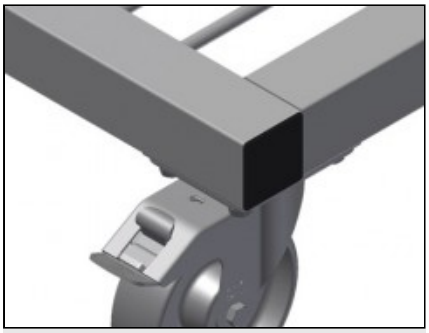

## Casters

Four casters, two of which have a fixing brake, provide a high degree of mobility and easy, safe handling

**elumatec AG**
Pinacher Straße, 61
75417 Mühlacker
Germany

Tel +49 7041-14-184
sales@elumatec.com
www.elumatec.com

The right to make technical alterations is reserved.

## **PWS** / TROLLEYS

### MODELS

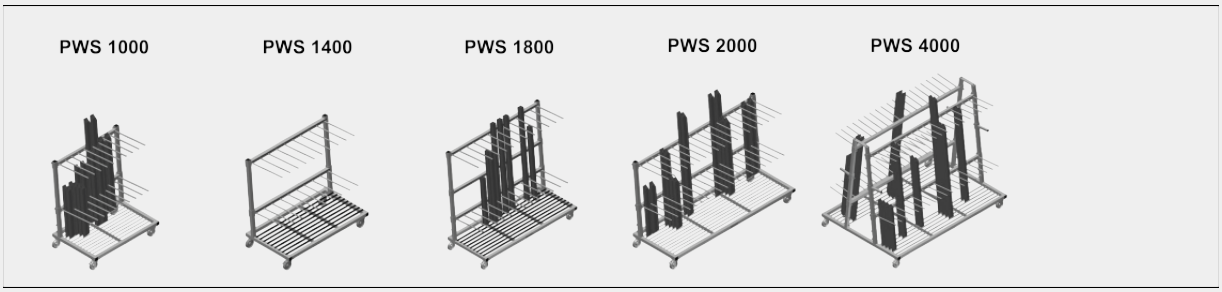


### DIMENSION AND WEIGHT

**PWS 1000 / PWS 1400 / PWS 1800 / PWS 2000 / PWS 4000**

| | |
|---|---|
| Length (mm) | 1.200 / 1.440 / 1.880 / 2.230 / 2.230 |
| Width (mm) | 800 / 790 / 800 / 800 / 1.560 |
| Height (mm) | 1.360 / 1.360 / 1.700 / 1.360 / 1.850 |
| Weight (kg) | 60 / 72 / 105 / 105 / 200 |

### STORAGE CAPACITY

**PWS 1000 / PWS 1400 / PWS 1800 / PWS 2000 / PWS 4000**

| | |
|---|---|
| Compartment dividers | 2 / 2 / 2 / 2 / 4 |
| Compartments | 9 / 9 / 12 / 18 / 36 |
| Compartment width (mm) | 100 / 120 / 120 / 100 / 100 |
| Compartment depth (mm) | 540 / 540 / 540 / 540 / 400 |
| Support height (mm) | 1.150 / 1.150 / 1.500 / 1.150 / 1.620 |
| Load capacity (kg) | 350 / 350 / 350 / 350 / 600 |
| Quantity of profile bars | 30-40 / 30-40 / 12-60 / 60-80 / 120-160 |

**PWS 4000**

| | |
|---|---|
| Compartments per side | 18 |

**elumatec AG**
Pinacher Straße, 61
75417 Mühlacker
Germany

Tel +49 7041-14-184
sales@elumatec.com
www.elumatec.com

The right to make technical alterations is reserved.

## CHARACTERISTICS

| | |
|---|---|
| **PWS 1000 / PWS 1400 / PWS 1800 / PWS 2000** | |
| Profile trolley with loading on one side | ● |
| **PWS 4000** | |
| Profile trolley can be loaded on both sides | ● |
| **PWS 1000 / PWS 2000 / PWS 4000** | |
| Supporting surface with bar grid floor | ● |
| Compartment dividers with protective tubing | ○ |
| **PWS 1400 / PWS 1800** | |
| Compartment dividers with protective tubing | ● |
| Lower supporting surface with rubber strips | ● |
| Rear back support with rubber strips | ● |
| **PWS 1800** | |
| Additional height adjustable compartment divider with plastic protection | ○ |
| **PWS 1000 / PWS 1400 / PWS 1800 / PWS 2000 / PWS 4000** | |
| Swivel castors diameter (mm) | 125 |

Included ● Available ○

**elumatec AG**
Pinacher Straße, 61
75417 Mühlacker
Germany

Tel +49 7041-14-184
sales@elumatec.com
www.elumatec.com

The right to make technical alterations is reserved.